IN

ES1208AC+

Paved surface scissor lift

STANDARD EQUIPMENT

- AC batteries with IP67 waterproof system
- Automatic tipping protection system underneath body
- Crushing protection
- High ground clearance
- Self-locking door on platform
- Speed limit at full height
- Electric steering system
- Drivable at full height
- Platform load sense system
- Automatic braking system
- Non-marking tyres
- Tilt indicator with alarm
- Warning siren during lowering and dual flashing LED light
- Safety bracket for maintenance operations
- Horn
- Cylinder locking valve
- Emergency stop button
- Emergency lowering system
- Driving motor protection
- Anchoring eyebolts
- On-board diagnostics system
- Hour counter
- Proportional controls
- Fold-down guardrails
- Platform power socket
- Lithium battery - Maintenance free
- Motion alarm
- Integral front and side holes for forklift transportation
- Charging protection system
- Charge level gauge
- Tie-down and lifting points
- Undirectional platform extention
- Two-wheel drive
- Two-wheel steering
- Hidraulic oil leak contaiments system
- Energy recovery system during lowering



LOGISTICS | CONSTRUCTION

ES1208AC+		
Load capacity		250 kg
Load capacity on extended platform		113 kg
Max. occupants (inside/outside)		2/0
Max. working height	A	12.00 m
Platform floor level height	B	10.00 m
Overall length	C	2.48 m
Overall width	D	0.83 m
Overall height (rails up)	E	2.51 m
Transport height (rails down)	F	2.05
Platform dimensions (length/width)		2.27 m / 0.81 m
Platform extension	G	0.90 m
Ground clearance (stowed)		0.10 m
Ground clearance (raised)		0.019 m
Wheelbase	H	1.87 m
Turning radius (inside)		0 m
Turning radius (outside)		2.10 m
Driving motors		2x15VAC/0.87 kW
Lifting motors		15VAC/3.42kW
Travel speed (stowed)		6.0 km/h
Travel speed (raised)		0.8 km/h
Batteries		28.8V/150 Ah Lithium batteries
Hydraulic tank		20 l
Integrated battery charger		28V/30A
Gradeability		25%
maximum working slope		1.5°/3°
Non-marking tyres		381×127 mm
Weight (CE)		3,150 kg



Electric actuator steerling system



High efficienty pump system

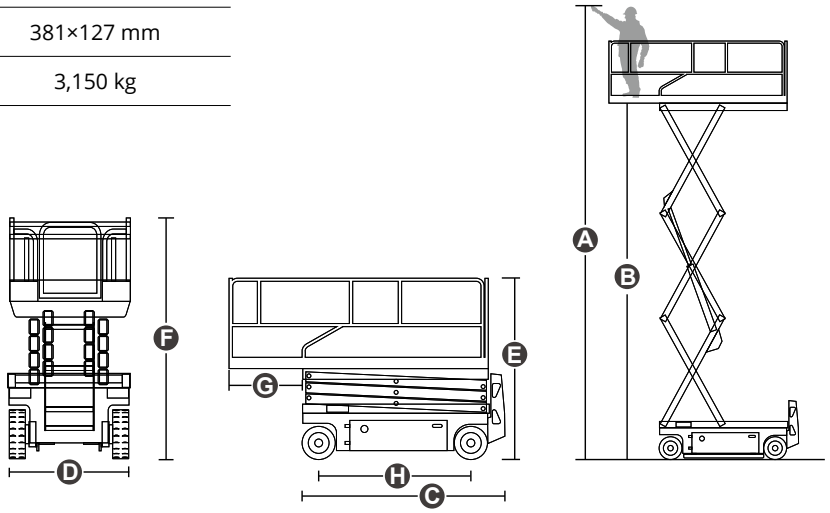

STANDARDS MET: EN 280-1, ANSI/SAIA A92.20

The data given in this brochure are provided for information purposes and are subject to change without prior notice.
All images are purely guideline and might not give an exact representation of the product.