IN

MJP08OF

Vertical mast lift

STANDARD EQUIPMENT

- Crushing protection
- High ground clearance
- Self-locking door on platform
- Horn
- Emergency stop button
- Emergency lowering system
- On-board diagnostics system
- Hour counter
- Proportional controls
- Integrated holes for fork transport
- Charge level gauge
- Tie-down and lifting points
- Unidirectional platform extension
- Two-wheel drive
- Two-wheel steering
- Manual brake release
- Automatic braking system
- Tilt indicator with alarm
- Movement alarm sensor
- Charger protection
- Platform load moment indicator
- Drive enable system
- Flashing LED light
- Drivable at full height



LOGISTICS | CONSTRUCTION

MJP08OF		
Load capacity		227 kg
Load capacity on extended platform		113 kg
Max. occupants		1/0
Max. working height	A	7.60 m
Max platform height	B	5.60 m
Overall length	C	1.60 m
Overall width	D	0.80 m
Overall heigth	E	1.99 m
Platform dimensions (length/width)		1.00 m/0.76 m
Platform extension		0.50 m
Ground clearance (stowed)		0.06 m
Ground clearance (raised)		0.014 m
Wheelbase	F	1.21 m
Turning radius (inside)		0.60 m
Turning radius (outside)		1.80 m
Driving motors		2x24VAC/0.5kW
Lifting motors		24VDC/2.2kW
Travel speed (stowed)		3.6 km/h
Travel speed (rated)		0.50 km/h
Up\Down Speed		32 sec/32 sec
Batteries		2x12V/115Ah
Integrated battery charger		24VDC /15A
Gradeability		25%
Maximum working slope (indoor use)		1.5°/3°
Tyres		230x100 mm
Weight (CE)		1,380 kg



Non-marking solid tyres

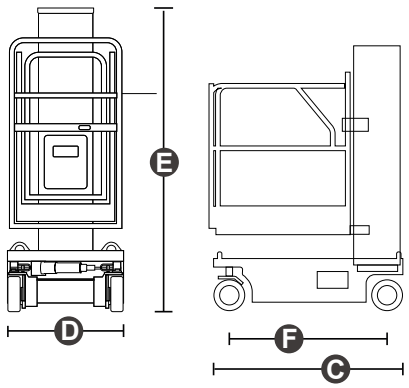

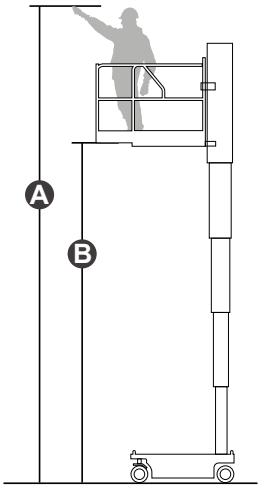

STANDARDS MET: EN 280-1, ANSI/SAIA A92.20

The data given in this brochure are provided for information purposes and are subject to change without prior notice. All images are purely guideline and might not give an exact representation of the product.