THA

4,5.8

PRELIMINARY

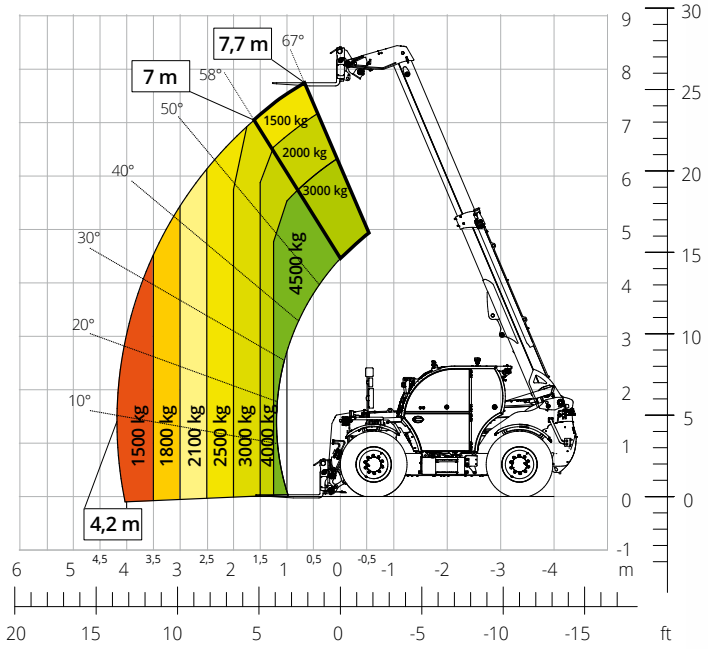

Load Chart **on tyres**



AGRICULTURE

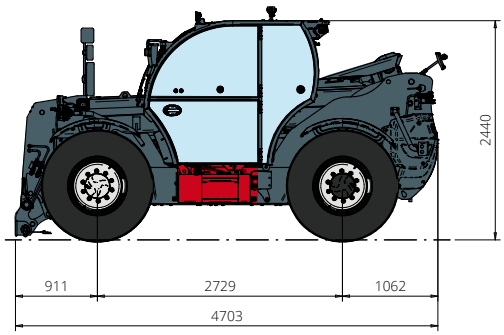

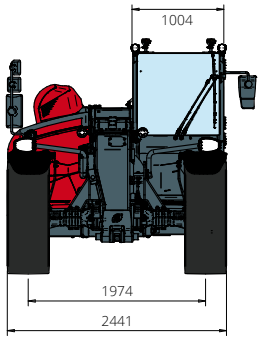

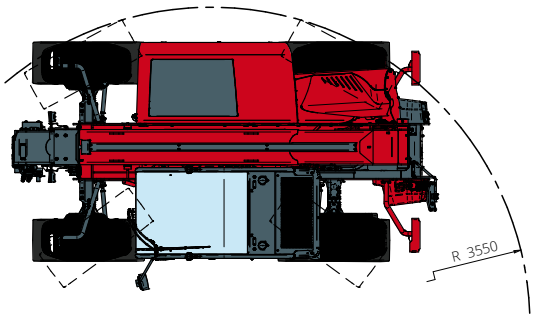

Machine model	Telescopic handler	THA 4,5.8
	Maximum lifting capacity	4,500 kg
	Maximum lifting height	7.70 m
	Maximum reach	4.20 m
Engine	Model	**FPT N45 Stage V**
	Rated power	125 kW (170 hp) a 2,200 rpm
	Maximum torque	712 Nm at 1,500 rpm
	Displacement	4.5 l
	Cylinders	4 in line
	Engine configuration	Turbocharged direct injection diesel
	Cooling system	Water – intercooler
Transmission	Type	Hydrostatic
	Maximum pressure	510 bar
	Gear box	Dropbox, 2 speeds forward-reverse
Axles and brakes	Type	Axles with planetary gearboxes
	Front axle	Steering
	Rear axle	Oscillating and steering
	Sideshift	-
	No. of driving/steering wheels	4WD - 4WS
	Steering mode	Frontal/Concentric/Crab
	Service brake	Wet multi-disk on front and rear axle
	Parking brake	Hydraulic with negative action on front and rear axles
	Tyres dimensions	460/70 R24
Performance	Max. travel speed	40 km/h
	Turning radius (over tyres)	3,770 mm
	Tractive effort	9,600 daN
Weights	Total unladen*	9000 kg
Tank and system capacities	Fuel tank	130 l
	AdBlue	20 l
	Hydraulic oil tank	130 l
	Engine oil tank	13,5 l
	Cooling liquid	30 l
Hydraulic circuit for movements	Circuit type	Electronic load sensing
	Service pump	Variable displacement
	Max. hydraulic flow rate	130 l/min
	Max. boom head flow rate	100 l/min
	Max. operating system pressure	350 bar
	Controls for boom movements	Compansated electro-proportional valve
	Movements control	1 joystick with integrated manoeuvre enable
Road type approval	167/2013: Mother Regulation	T1a
Standard met	2006/42/EC: EU Machinery Directive 2000/14/EC: Noise Directive EN 1459-1: Relating to standards on the safety requirements for variable reach machines EN 280-1: standards relating to mobile elevating work platforms (if available) 2014/30/EU: EMC Directive ROPS/FOPS level 2: relating to the standards for protective structures	

The data given in this brochure are provided for information purposes and are subject to change without prior notice.
All images are purely guideline and might not give an exact representation of the product.
*the stated weight refers to the vehicle unladen with standard equipment and may vary depending on the chosen configuration.