THA

3,5.7

PRELIMINARY

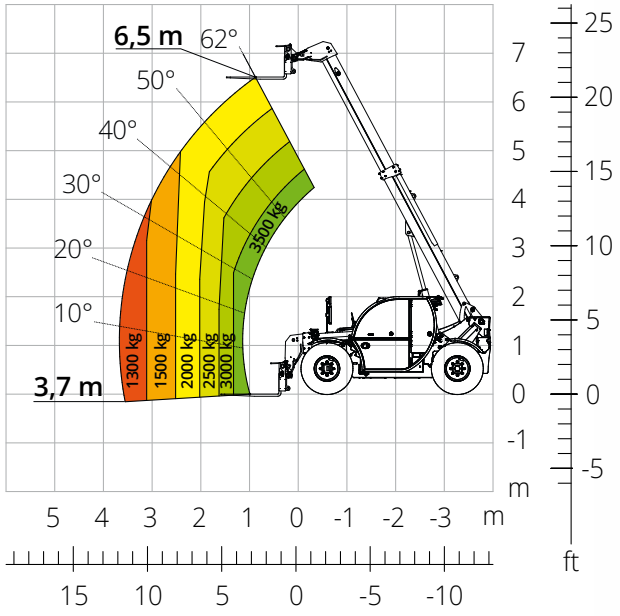



Load chart **on tyres**

AGRICULTURE

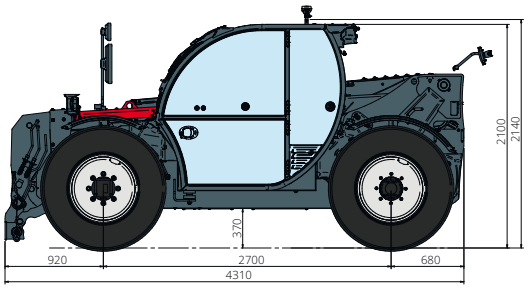

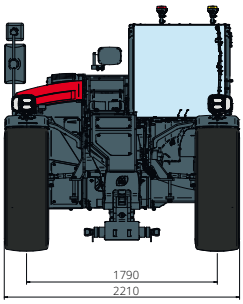

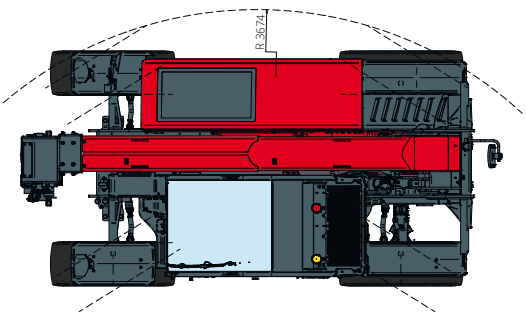

Machine model	Telescopic handler	THA 3,5.7	
	Maximum lifting capacity	3,500 kg	
	Maximum lifting height	6.50 m	
	Maximum reach	3.70 m	
Engine	Model	**Deutz TCD 3,6 L4 EDG - Stage IIIA**	**Deutz TCD 3,6 L4 Stage V**
	Rated power	85 kW (115 hp) a 2,600 rpm	
	Maximum torque	460 Nm at 1,600 rpm	
	Displacement	3.6 l	
	Cylinders	4 in line	
	Engine configuration	Turbocharged direct injection diesel	
	Cooling system	Water	
Transmission	Type	Hydrostatic	
	Maximum pressure	500 bar	
	Gear box	Dropbox, 2 speeds forward-reverse	
Axles and brakes	Type	Axles with planetary gearboxes	
	Front axle	Steering	
	Rear axle	Free oscillation	
	Sideshift	-	
	No. of driving/steering wheels	4WD - 4WS	
	Steering mode	Frontal/Concentric/Crab	
	Service brake	Wet multi-disk on front and rear axle	
	Parking brake	Hydraulic with negative action on front axle	
	Tyres dimensions	405/70 R24	
Performance	Max. travel speed	40 km/h	
	Turning radius (over tyres)	3,380 mm	
	Tractive effort	7,100 daN	
Weights	Total unladen*	7,200 kg	
Tank and system capacities	Diesel fuel	75 l	
	AdBlue	10 l	
	Hydraulic fluid	95 l	
	Engine oil tank	9 l	
	Coolant	15 l	
Hydraulic circuit for movements	Circuit type	Load sensing	
	Service pump	Variable displacement	
	Max. hydraulic flow rate	90 l/min	
	Max. boom head flow rate	75 l/min	
	Max. operating system pressure	315 bar	
	Controls for boom movements	Compensated electro-proportional valve	
	Movements control	1 joystick with integrated manoeuvre enable	
Road type approval	167/2013: Mother Regulation	T1a	
Standard met	2006/42/EC: EU Machinery Directive 2000/14/EC: Noise Directive EN 1459-1: Relating to standards on the safety requirements for variable reach machines EN 280-1: standards relating to mobile elevating work platforms (if available) 2014/30/EU: EMC Directive ROPS/FOPS level 2: relating to the standards for protective structures		

The data given in this brochure are provided for information purposes and are subject to change without prior notice.
All images are purely guideline and might not give an exact representation of the product.
**the stated weight refers to the vehicle unladen with standard equipment and may vary depending on the chosen configuration.*