ATTACHMENTS
RTH / TH / HTH

MAGNI
TELESCOPIC HANDLERS

IF YOU DREAM IT, YOU CAN DO IT.

Riccardo Magni - Chairman & CEO

We build the future.
The future doesn't just happen; it has to be built, day by day. For Magni, the future has meant challenges, enterprise and innovation since 2013. This vision, embedded in our brand's DNA, is expressed in a constant commitment to the research and development of new solutions and new technologies.

ATTACHMENTS
COLLECTION

PLATFORMS

Magni offers a wide range of platforms to offer safe access at any height. From standard models to highly specialised ones, we can provide the perfect solution for any application, whether in construction or large maintenance projects.

Section 1

FORK CARRIAGES

Ideally suited to even the most demanding applications, like quarries and mines, our fork carriages can handle any job even under extreme conditions. From simple fork carriages to heavy-duty units with oversized forks, we have the best solution to get the job done.

Section 3

WINCHES

Our winches offer unbeatable performance for effortlessly lifting and moving loads. Compact and robust, these first-class attachments offer Magni's hallmark quality in every detail.

Section 2

LATTICE BOOMS WITH/ WITHOUT WINCH

Precise and versatile, lattice booms are the ideal solution, whatever the job. They easily adapt to varying conditions, always offering the best solution to any problem.

Section 4

HOOKS

Simple and yet extremely versatile and durable, Magni type-approved hooks have a vast range of applications in construction. The range includes hooks of various load capacities in response to specific requirements, always with the best performance.

Section 5

BUCKETS

Developed for the construction and maintenance sectors, our buckets are available in a range of lifting capacities, and are known as reliable partners in any industrial application. Like all our attachments, they offer Magni's guaranteed performance and quality.

Section 7

HANDLERS

Designed specifically for mining and quarrying applications, as well as the logistics sector, our clamps offer unrivalled versatility and performance. The range has been specifically designed to handle even the toughest conditions.

Section 6

SPECIAL EQUIPMENT

This category covers our attachment range for specialised applications. From removing large trees to cleaning roads with snow ploughs or installing glass panels high up on tall buildings - Magni always has the best solution for specialised requirements.

Section 8

PLATFORMS

Magni offers a wide range of platforms to offer safe access at any height. From standard models to highly specialised ones, we can provide the perfect solution for any application, whether in construction or large maintenance projects.

Check the compatibility and capacity of each attachment with your dealer.

PLATFORM, 250 KG

ATT-01-001

Fixed platform with a maximum load capacity of 250 kg, type-approved to carry two operators. Galvanised, reinforced steel structure. Non-slip floor for increased operator safety even in wet conditions.

CHECK FOR ANY PREARRANGEMENT REQUIREMENTS

P 1,4

250 kg	1,400 x 700 mm	2	✓

ROTATING PLATFORM, 250 KG

ATT-01-003

Rotating platform (+/- 90°) with a maximum load capacity of 250 kg, type-approved to carry two operators. Galvanised, reinforced steel structure. Non-slip floor for increased operator safety even in wet conditions.

CHECK FOR ANY PREARRANGEMENT REQUIREMENTS

RP 1,4

250 kg	1,400 x 670 mm	+ / - 90°	2	✓

PLATFORM, 250 KG

ATT-01-002

Fixed platform with a maximum load capacity of 250 kg, type-approved to carry two operators. Galvanised, reinforced steel structure. Non-slip floor for increased operator safety even in wet conditions.

CHECK FOR ANY PREARRANGEMENT REQUIREMENTS

PS 1,4				
				RFID
250 kg	1,400 x 700 mm	✗	2	✗

ROTATING PLATFORM, 500 KG

ATT-01-005

Rotating platform with a maximum load capacity of 500 kg, type-approved to carry three operators. Galvanised, reinforced steel structure. Non-slip floor for increased operator safety even in wet conditions. The platform is equipped with an overload sensor and rack with anti-shock system to ensure smooth, rotational movements when stopping and starting. The base of the platform is equipped with fork insertion points.

CHECK FOR ANY PREARRANGEMENT REQUIREMENTS

RP 2,2				
				RFID
500 kg	2,230 x 1,156 mm	+ / - 90°	3	✓

EXTENDABLE ROTATING PLATFORM, 500 KG - 4.5 M

ATT-01-007

Extendable rotating platform with a maximum load capacity of 500 kg, type-approved to carry three operators. Galvanised, reinforced steel structure. Non-slip floor for increased operator safety even in wet conditions. The platform is equipped with an overload sensor and rack with anti-shock system to ensure smooth, rotational movements when stopping and starting. An efficient patented extension system provides extra reach of 1 m per side. The base of the platform is equipped with fork insertion points.

CHECK FOR ANY PREARRANGEMENT REQUIREMENTS

REP 2-4,5				
				RFID
500 kg	2,350 - 4,530 x 1,100 mm	+ / - 90°	3	✓

EXTENDABLE ROTATING PLATFORM, 500 KG - 5.5 M

ATT-01-009

Extendable rotating platform with a maximum load capacity of 500 kg, type-approved to carry three operators. Galvanised, reinforced steel structure. Non-slip floor for increased operator safety even in wet conditions. The platform is equipped with an overload sensor and rack with anti-shock system to ensure smooth, rotational movements when stopping and starting. An efficient patented extension system provides extra reach of 1 m per side. The base of the platform is equipped with fork insertion points.

CHECK FOR ANY PREARRANGEMENT REQUIREMENTS

REP 2-5.5				
				RFID
500 kg	2,350 - 4,530 x 1,150 mm	+ / - 90°	3	✓

EXTENDABLE ROTATING PLATFORM, 500 KG - 6.5 M

ATT-01-011

Extendable rotating platform with a maximum load capacity of 500 kg, type-approved to carry three operators. Galvanised, reinforced steel structure. Non-slip floor for increased operator safety even in wet conditions. The platform is equipped with an overload sensor and rack with anti-shock system to ensure smooth, rotational movements when stopping and starting. An efficient patented extension system provides extra reach of 1 m per side. The base of the platform is equipped with fork insertion points.

CHECK FOR ANY PREARRANGEMENT REQUIREMENTS

REP 2-6.5				
				RFID
500 kg	2,350 - 6,530 x 1,150 mm	+ / - 90°	3	✓

EXTENDABLE ROTATING PLATFORM, 1,000 KG

ATT-01-016

Extendable rotating platform with a maximum load capacity of 1,000 kg, type-approved to carry three operators. Galvanised, reinforced steel structure. Non-slip floor for increased operator safety even in wet conditions. The platform is equipped with an overload sensor and rack with anti-shock system to ensure smooth, rotational movements when stopping and starting. An efficient patented extension system provides extra reach of 1 m per side. The base of the platform is equipped with fork insertion points.

CHECK FOR ANY PREARRANGEMENT REQUIREMENTS

REP 10.2-4,7				
				RFID
1,000 kg	2,384 - 4,685 x 1,150 mm	+ / - 90°	3	✓

TELESCOPIC PLATFORM, 200 KG

ATT-01-022

Telescopic platform with a maximum load capacity of 200 kg, type-approved to carry two operators. Its telescopic boom extends the machine's maximum height with a standard platform by up to 10.2 m. Galvanised, reinforced steel structure. Non-slip floor for increased operator safety even in wet conditions. Rotation (+/- 90°) provided by a hydraulic rotating actuator.

CHECK FOR ANY PREARRANGEMENT REQUIREMENTS

TP 2.10

							RFID
200 kg	1,400 x 670 mm	+ / - 90°	2	6,430 - 10,200 mm	6,440 - 9,770 mm	3,330 mm	✓

TELESCOPIC PLATFORM, POSITIVE/NEGATIVE, 250 KG

ATT-01-024

Telescopic platform with a maximum load capacity of 250 kg, type-approved to carry two operators. Enables work in positive and negative positions. This makes it ideal for maintaining viaducts and all applications requiring access to hard-to-reach positions. The working mode can be changed from positive to negative hydraulically, thus ensuring operator safety. Galvanised, reinforced steel structure. Non-slip floor for increased operator safety even in wet conditions.

CHECK FOR ANY PREARRANGEMENT REQUIREMENTS

TP O-U-R

								RFID
250 kg	1,240 x 860 mm	340° hydraulic	2	4,132 - 6,270 mm	2,862-4,593 mm	3,950 - 5,681 mm	1,800 mm	✓

TELESCOPIC PLATFORM, 450 KG

ATT-01-004

Telescopic extensible platform with maximum capacity of 450 kg and approved for three people. Thanks to the telescopic boom with which it is equipped, it allows for a maximum working height of 12 m more than a standard platform. Galvanised and reinforced steel structure. Non-slip floor design to ensure greater operator stability even in wet conditions. The 360° rotation with closed boom combined with the +/-20° angular correction with the boom extended, makes this platform a cutting-edge solution for working at height.

TP 4,5.10

							RFID
450 kg	2,440 x 910 mm	360°	3	6,632 - 10,030 mm	6,891 - 11,541 mm	2,950 mm	✓

MINING PLATFORM, 450 KG

ATT-01-027

A special platform for use in mines, with a maximum load capacity of 450 kg, type-approved to carry two operators. It is equipped with an integral protection grille over the platform to protect against falling debris. The grille is equipped with anti-crushing sensors for increased protection against human error. Galvanised, reinforced steel structure. Non-slip floor for increased operator safety even in wet conditions. The base of the platform is equipped with fork insertion points.

CHECK FOR ANY PREARRANGEMENT REQUIREMENTS

CP 1.8

			RFID
450 kg	1,810 x 1,000 mm	2	✓

EXTENDABLE ROTATING PLATFORM, 500 KG, WITH 600 KG CAPACITY WINCH

ATT-01-026

Extendable rotating platform with a maximum load capacity of 500 kg, type-approved to carry three operators. Equipped with a 600 kg capacity hydraulic winch, +/- 90° rotation, 0-64° lifting and 49 m cable. Galvanised, reinforced steel structure. Non-slip floor for increased operator safety even in wet conditions. The platform is equipped with an overload sensor and rack with anti-shock system to ensure smooth, rotational movements when stopping and starting. An efficient patented extension system provides extra reach of 1 m per side. The base of the platform is equipped with fork insertion points.

CHECK FOR ANY PREARRANGEMENT REQUIREMENTS

REP 5.2-4,5 WO,6

500 kg	2,350 - 4,530 mm x 1,100 mm	+ / - 90°	3	600 kg	2,029 mm	+ / - 90° manual	0° /64°	49 m	✓

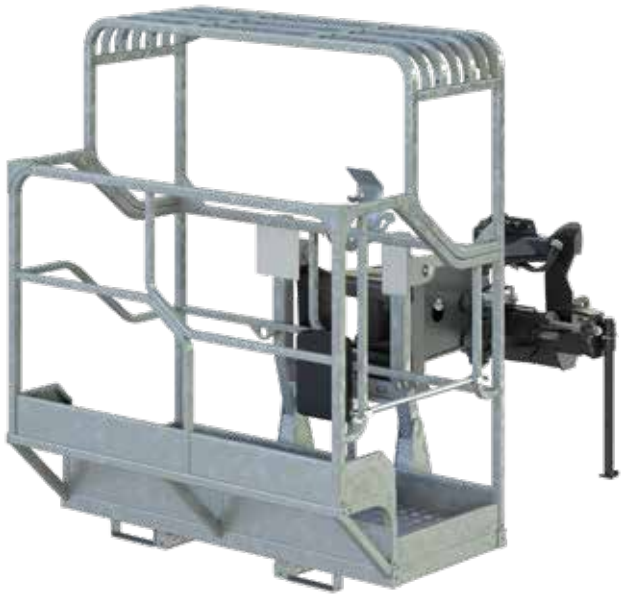

ROTATING PLATFORM FOR WORKING IN TUNNELS 500 KG

ATT-01-013

Special platform for use in mines or tunnels, with a maximum load capacity of 500 kg, type-approved to carry three operators. It is equipped with an integral protection grille over the platform to protect against crushing and falling debris. Galvanised, reinforced steel structure. Non-slip floor for increased operator safety even in wet conditions. The platform is equipped with an anti-shock system to ensure smooth, rotational movements when stopping and starting. The base of the platform is equipped with fork insertion points.

CHECK FOR ANY PREARRANGEMENT REQUIREMENTS

CRP 5

500 kg	1,810 x 1,000 mm	+/- 90°, hydraulic	3	✓

EXTENDABLE ROTATING PLATFORM, 1,000 KG, FOR ASBESTOS MITIGATION

ATT-01-018

Special platform for asbestos removal from elevated positions with a load capacity of 1,000 kg, type-approved to carry two operators. It features two closed stations to accommodate the operators with enabling pedal switches. Both operators must depress their pedal before the platform will move. This makes it possible to move and transfer materials on the roof with the front bulkhead folded down. Non-slip floor for increased operator safety even in wet conditions. The platform is equipped with an overload sensor and rack with anti-shock system to ensure smooth, rotational movements when stopping and starting.

CHECK FOR ANY PREARRANGEMENT REQUIREMENTS

RPRAB 10-3,5

				RFID
1,000 kg	Open: 3,510 x 2,210 mm Closed: 3,510 x 1,155 mm	+/- 90°, hydraulic	2	✓

EXTENDABLE ROTATING PLATFORM FOR ROOFING APPLICATIONS, 1,000 KG

ATT-01-020

Extendable rotating platform with a maximum load capacity of 1,000 kg, type-approved to carry three operators. It features an openable bulkhead to facilitate loading and unloading materials. The platform has sensors which disable its movement when the basket is open. Galvanised, reinforced steel structure. Non-slip floor for increased operator safety even in wet conditions. The platform is equipped with an overload sensor and rack with anti-shock system to ensure smooth, rotational movements when stopping and starting. The base of the platform is equipped with fork insertion points.

CHECK FOR ANY PREARRANGEMENT REQUIREMENTS

RRP 10.2,5-3,5

						RFID
1,000 kg	Open: 3.420 x 1,880 mm Closed: 2.470 x 1,880 mm	+/- 90°, hydraulic	3	2,020 mm	740 mm	✓

COMPATIBILITY

	ATT-**01-001**	ATT-**01-002**	ATT-**01-003**	ATT-**01-004**	ATT-**01-005**	ATT-**01-007**	ATT-**01-009**	ATT-**01-011**
RTH 5.18	✓	✗	✓	✗	✓	✓	✓	✓
RTH 5.21	✓	✗	✓	✗	✓	✓	✓	✓
RTH 5.23	✓	✗	✓	✗	✓	✓	✓	✓
RTH 5.25	✓	✗	✓	✗	✓	✓	✓	✓
RTH 6.22 EC/TC	✓	✗	✓	✗	✓	✓	✓	✓
RTH 6.26 EC/TC	✓	✗	✓	✗	✓	✓	✓	✓
RTH 6.31 EC/TC	✓	✗	✓	✗	✓	✓	✓	✓
RTH 8.27/TC	✓	✗	✓	✓	✓	✓	✓	✓
RTH 8.35/TC	✓	✗	✓	✓	✓	✓	✓	✓
RTH 8.39/TC	✓	✗	✓	✓	✓	✓	✓	✓
RTH 8.46/TC	✓	✗	✓	✓	✓	✓	✓	✓
RTH 8.51	✓	✗	✓	✓	✓	✓	✓	✓
RTH 10.37	✓	✗	✓	✗	✓	✓	✓	✓
RTH 13.26	✓	✗	✓	✗	✓	✓	✓	✓
TH 3.6	✗	✓	✗	✗	✗	✗	✗	✗
TH 3,5.7	✓	✗	✗	✗	✗	✗	✗	✗
TH 3,5.9	✓	✗	✗	✗	✗	✗	✗	✗
TH 4.15 S/SP	✗	✗	✗	✗	✗	✗	✗	✗
TH 4.19 S/SP	✗	✗	✗	✗	✗	✗	✗	✗
TH 4,5.19 P	✓	✗	✓	✗	✗	✓	✗	✗
TH 5.8 P	✓	✗	✓	✗	✗	✗	✗	✗
TH 5,5.15/P	✓	✗	✓	✗	✗	✓	✗	✗
TH 5,5.19 P	✓	✗	✓	✗	✗	✓	✗	✗
TH 5,5.24 P	✓	✗	✓	✗	✗	✓	✗	✗
TH 6.20 P	✓	✗	✓	✗	✗	✓	✗	✗
TH 7.10 P	✓	✗	✓	✗	✗	✗	✗	✗
HTH 10.10	✗	✗	✗	✗	✗	✗	✗	✗
HTH 12.10	✗	✗	✗	✗	✗	✗	✗	✗
HTH 16.10	✗	✗	✗	✗	✗	✗	✗	✗
HTH 20.10	✗	✗	✗	✗	✗	✗	✗	✗
HTH 25.11	✗	✗	✗	✗	✗	✗	✗	✗
HTH 27.11	✗	✗	✗	✗	✗	✗	✗	✗
HTH 35.12	✗	✗	✗	✗	✗	✗	✗	✗

	ATT-**01-013**	ATT-**01-016**	ATT-**01-018**	ATT-**01-020**	ATT-**01-022**	ATT-**01-024**	ATT-**01-026**	ATT-**01-027**
RTH 5.18	✓	✓	✓	✓	✓	✓	✓	✓
RTH 5.21	✓	✓	✓	✓	✓	✓	✓	✓
RTH 5.23	✓	✓	✓	✓	✓	✓	✓	✓
RTH 5.25	✓	✓	✓	✓	✓	✓	✓	✓
RTH 6.22 EC/TC	✓	✓	✓	✓	✓	✓	✓	✓
RTH 6.26 EC/TC	✓	✓	✓	✓	✓	✓	✓	✓
RTH 6.31 EC/TC	✓	✓	✓	✓	✓	✓	✓	✓
RTH 8.27/TC	✓	✓	✓	✓	✓	✓	✓	✓
RTH 8.35/TC	✓	✓	✓	✓	✓	✓	✓	✓
RTH 8.39/TC	✓	✓	✓	✓	✓	✓	✓	✓
RTH 8.46/TC	✓	✓	✓	✓	✓	✓	✓	✓
RTH 8.51	✓	✓	✓	✓	✓	✓	✓	✓
RTH 10.37	✓	✓	✓	✓	✓	✓	✓	✓
RTH 13.26	✓	✓	✓	✓	✓	✓	✓	✓
TH 3.6	✗	✗	✗	✗	✗	✗	✗	✗
TH 3,5.7	✗	✗	✗	✗	✗	✗	✗	✗
TH 3,5.9	✗	✗	✗	✗	✗	✗	✗	✗
TH 4.15 S/SP	✗	✗	✗	✗	✗	✗	✗	✗
TH 4.19 S/SP	✗	✗	✗	✗	✗	✗	✗	✗
TH 4,5.19 P	✗	✓	✗	✗	✗	✗	✗	✓
TH 5.8 P	✗	✗	✗	✗	✗	✗	✗	✓
TH 5,5.15/P	✗	✓	✗	✗	✗	✗	✗	✓
TH 5,5.19 P	✗	✓	✗	✗	✗	✗	✗	✓
TH 5,5.24 P	✗	✓	✗	✗	✗	✗	✗	✓
TH 6.20 P	✗	✓	✗	✗	✗	✗	✗	✓
TH 7.10 P	✗	✗	✗	✗	✗	✗	✗	✓
HTH 10.10	✗	✗	✗	✗	✗	✗	✗	✗
HTH 12.10	✗	✗	✗	✗	✗	✗	✗	✗
HTH 16.10	✗	✗	✗	✗	✗	✗	✗	✗
HTH 20.10	✗	✗	✗	✗	✗	✗	✗	✗
HTH 25.11	✗	✗	✗	✗	✗	✗	✗	✗
HTH 27.11	✗	✗	✗	✗	✗	✗	✗	✗
HTH 35.12	✗	✗	✗	✗	✗	✗	✗	✗

✓: yes ✗: no

WINCHES

Our winches offer unbeatable performance for effortlessly lifting and moving loads. Compact and robust, these first-class attachments offer Magni's hallmark quality in every detail.

Check the compatibility and capacity of each attachment with your dealer.

DOUBLE PULL WINCH 2.7 T

ATT-02-001

Winch with a maximum load capacity of 2,700 kg, equipped with a type-approved swivel hook with safety catch. The attachment is equipped with a rope pressure roller and hydraulic limit switch system for rope raising/lowering. Metal storage support included.

W 2,7				
				RFID
2,700 kg	10 mm	25 m	24 m/min	✓

DOUBLE PULL WINCH 3.5 T

ATT-02-002

Winch with a maximum load capacity of 3,500 kg, equipped with a type-approved swivel hook. The attachment is equipped with a rope pressure roller and hydraulic limit switch system for rope raising/ lowering. Metal storage support included.

W 3,5				
				RFID
3,500 kg	10 mm	25 m	25 m/min	✓

SINGLE PULL WINCH 1.75 T / DOUBLE PULL WINCH 3.5 T

ATT-02-009

Winch configurable for two load capacities: 3,500 kg double pull and 1,750 kg single pull. The attachment is equipped with a rope pressure roller and hydraulic limit switch system for rope raising/ lowering. Metal storage support included.

W 3,5 - 1,75				
				RFID
1,750 / 3,500 kg	10 mm	54 m (single pull 1.75 t) 27 m (double pull 3.5 t)	48/24 m/min	✓

DOUBLE PULL WINCH 5 T

ATT-02-019

Winch with a maximum load capacity of 5,000 kg, equipped with a type-approved swivel hook. The attachment is equipped with a rope pressure roller and hydraulic limit switch system for rope raising/ lowering. Metal storage support included.

W 5				
				RFID
5,000 kg	12 mm	58 m	19 m/min	✓

DOUBLE PULL WINCH 6 T

ATT-02-004

Winch with a maximum load capacity of 6,000 kg, equipped with a type-approved swivel hook. The attachment is equipped with a rope pressure roller and hydraulic limit switch system for rope raising/lowering. Metal storage support included.

W 6				
				RFID
6,000 kg	12 mm	58 m	19 m/min	✓

SINGLE PULL WINCH 3 T / DOUBLE PULL WINCH 6 T

ATT-02-010

Winch configurable for two load capacities: 6,000 kg double pull and 3,000 kg single pull. The attachment is equipped with a rope pressure roller and hydraulic limit switch system for rope raising/lowering. Metal storage support included.

W 3 – 6				
				RFID
3,000 / 6,000 kg	12 mm	58 m (single pull 3 t) 26 m (double pull 6 t)	32/16 m/min	✓

DOUBLE PULL WINCH 8 T

ATT-02-006

Winch with a maximum load capacity of 8,000 kg, equipped with a type-approved swivel hook. The attachment is equipped with a rope pressure roller and hydraulic limit switch system for rope raising/ lowering. Metal storage support included.

W 8				
				RFID
8,000 kg	16 mm	88 m	13 m/min	✓

SINGLE PULL WINCH 4 T / DOUBLE PULL WINCH 8 T

ATT-02-023

Winch configurable for two load capacities: 8,000 kg double pull and 4,000 kg single pull. The attachment is equipped with a rope pressure roller and hydraulic limit switch system for rope raising/lowering. Metal storage support included.

W 4 - 8				
				RFID
8,000 / 4,000 kg	16 mm	83 m (single pull 4 t) 41 m (double pull 8 t)	13 m/min	✓

WINCH SINGLE PULL 5 T / DOUBLE PULL 10 T

ATT-02-021

Winch configurable for two load capacities: 10,000 kg double pull and 5,000 kg single pull. The attachment is equipped with a rope pressure roller and hydraulic limit switch system for rope raising/lowering. Metal storage support included.

W 5 - 10				
				RFID
10,000/5,000 kg	16 mm	83 m (single pull 5 t) 41 m (double pull 10 t)	13 m/min.	✓

DOUBLE PULL WINCH 16 T

ATT-02-008

Winch with a maximum load capacity of 16,000 kg, equipped with a type-approved swivel hook. The attachment is equipped with a rope pressure roller and hydraulic limit switch system for rope raising/lowering. Metal support for handling included.

W 16				
				RFID
16,000 kg	16 mm	88 m	10 m/min	✓

DOUBLE PULL WINCH 13 T

ATT-02-018

Winch with a maximum load capacity of 13,000 kg, equipped with a type-approved swivel hook. The attachment is equipped with a rope pressure roller and hydraulic limit switch system for rope raising/lowering. Metal storage support included.

W 13				
				RFID
13,000 kg	16 mm	88 m	8 m/min	✓

WINCH BOOM, SINGLE PULL 3 T / DOUBLE PULL 6 T - FOR RTH 6.22, FOR ROAD USE

ATT-02-022

Winch configurable for two load capacities: 6,000 kg double pull and 3,000 kg single pull, equipped with a type-approved swivel hook. The attachment is equipped with a rope pressure roller and hydraulic limit switch system for rope raising/lowering. Improved performance compared to the W6 due to its configuration with the drum mounted on the boom and not directly fastened to the winch.

WB 6				
				RFID
6,000/3,000 kg	12 mm	95 m (single pull 3 t) 47.5 m (double pull 6 t)	16 m/min	✓

REAR BOOM WINCH, SINGLE PULL 3 T / DOUBLE PULL 6 T - FOR RTH 6.26, FOR ROAD USE

ATT-02-012

Winch configurable for two load capacities: 6,000 kg double pull and 3,000 kg single pull, equipped with a type-approved swivel hook. The attachment is equipped with a rope pressure roller and hydraulic limit switch system for rope raising/lowering. Improved performance compared to the W6 due to its configuration with the drum mounted on the boom and not directly fastened to the winch.

WB 6				
				RFID
6,000/3,000 kg	12 mm	95 m (single pull 3 t) 47.5 m (double pull 6 t)	16 m/min	✓

REAR BOOM WINCH, SINGLE PULL 3 T / DOUBLE PULL 6 T - FOR RTH 6.31, FOR ROAD USE

ATT-02-013

Winch configurable for two load capacities: 6,000 kg double pull and 3,000 kg single pull, equipped with a type-approved swivel hook. The attachment is equipped with a rope pressure roller and hydraulic limit switch system for rope raising/lowering. Improved performance compared to the W6 due to its configuration with the drum mounted on the boom and not directly fastened to the winch.

WB 6				
				RFID
6,000/3,000 kg	12 mm	95 m (single pull 3 t) 47.5 m (double pull 6 t)	32 m/min.(single pull) 17 m/min.(double pull)	✓

REAR BOOM WINCH, SINGLE PULL 4 T / DOUBLE PULL 8 T - FOR RTH 8.27, FOR ROAD USE

ATT-02-005

Winch configurable for two load capacities: 8,000 kg double pull and 4,000 kg single pull, equipped with a type-approved swivel hook. The attachment is equipped with a rope pressure roller and hydraulic limit switch system for rope raising/ lowering. Improved performance compared to the W6 due to its configuration with the drum mounted on the boom and not directly fastened to the winch.

WB 8				
				RFID
8,000/4,000 kg	16 mm	88 m (single pull 4 t) 44 m (double pull 8 t)	13m/min	✓

SINGLE PULL WINCH 3 T / DOUBLE PULL WINCH 6 T / TRIPLE PULL WINCH 8 T

ATT-02-014

Winch configurable for three different load capacities: 8,000 kg triple pull, 6,000 kg double pull and 3,000 kg single pull, equipped with a type-approved swivel hook. The attachment is equipped with a rope pressure roller and hydraulic limit switch system for rope raising/lowering.
With a lighter weight construction than conventional 8 tonne winches, this model has been developed specifically to maximise the performance of RTH machines rated for 8 tonne loads.

W 3/6/8				
				RFID
8,000/6,000/3,000 kg	12 mm	56 m (single pull 3 t) 28 m (double pull 6 t) 18 m (double pull 8 t)	13 m/min	✓

COMPATIBILITY

	ATT-**02-001**	ATT-**02-002**	ATT-**02-004**	ATT-**02-005**	ATT-**02-006**	ATT-**02-008**	ATT-**02-009**	ATT-**02-010**
RTH 5.18	✓	✓	✓	✗	✓	✗	✓	✓
RTH 5.21	✓	✓	✓	✗	✓	✗	✓	✓
RTH 5.23	✓	✓	✓	✗	✓	✗	✓	✓
RTH 5.25	✓	✓	✓	✗	✓	✗	✓	✓
RTH 6.22 EC/TC	✓	✓	✓	✗	✓	✗	✓	✓
RTH 6.26 EC/TC	✓	✓	✓	✗	✓	✗	✓	✓
RTH 6.31 EC/TC	✓	✓	✓	✗	✓	✗	✓	✓
RTH 8.27/TC	✓	✓	✓	✓	✓	✗	✓	✓
RTH 8.35/TC	✓	✓	✓	✗	✓	✗	✓	✓
RTH 8.39/TC	✓	✓	✓	✗	✓	✗	✓	✓
RTH 8.46/TC	✓	✓	✓	✗	✓	✗	✓	✓
RTH 8.51	✓	✓	✓	✗	✓	✗	✓	✓
RTH 10.37	✓	✓	✓	✗	✓	✗	✓	✓
RTH 13.26	✓	✓	✓	✗	✓	✗	✓	✓
TH 3.6	✗	✗	✗	✗	✗	✗	✗	✗
TH 3,5.7	✗	✗	✗	✗	✗	✗	✗	✗
TH 3,5.9	✗	✗	✗	✗	✗	✗	✗	✗
TH 4.15 S/SP	✗	✗	✗	✗	✗	✗	✗	✗
TH 4.19 S/SP	✗	✗	✗	✗	✗	✗	✗	✗
TH 4,5.19 P	✓	✓	✓	✗	✗	✗	✓	✓
TH 5.8 P	✓	✓	✓	✗	✗	✗	✓	✓
TH 5,5.15/P	✓	✓	✓	✗	✗	✗	✓	✓
TH 5,5.19 P	✓	✓	✓	✗	✗	✗	✓	✓
TH 5,5.24 P	✓	✓	✓	✗	✗	✗	✓	✓
TH 6.20 P	✓	✓	✓	✗	✗	✗	✓	✓
TH 7.10 P	✓	✓	✓	✗	✗	✗	✓	✓
HTH 10.10	✗	✗	✓	✗	✗	✗	✗	✗
HTH 12.10	✗	✗	✓	✗	✗	✗	✗	✗
HTH 16.10	✗	✗	✗	✗	✗	✓	✗	✗
HTH 20.10	✗	✗	✗	✗	✗	✓	✗	✗
HTH 25.11	✗	✗	✗	✗	✗	✓	✗	✗
HTH 27.11	✗	✗	✗	✗	✗	✓	✗	✗
HTH 35.12	✗	✗	✗	✗	✗	✓	✗	✗

	ATT-**02-012**	ATT-**02-013**	ATT-**02-014**	ATT-**02-018**	ATT-**02-019**	ATT-**02-021**	ATT-**02-022**	ATT-**02-023**
RTH 5.18	✗	✗	✓	✓	✓	✓	✗	✓
RTH 5.21	✗	✗	✓	✓	✓	✓	✗	✓
RTH 5.23	✗	✗	✓	✓	✓	✓	✗	✓
RTH 5.25	✗	✗	✓	✓	✓	✓	✗	✓
RTH 6.22 EC/TC	✗	✗	✓	✓	✓	✓	✓	✓
RTH 6.26 EC/TC	✓	✗	✓	✓	✓	✓	✗	✓
RTH 6.31 EC/TC	✗	✓	✓	✓	✓	✓	✗	✓
RTH 8.27/TC	✗	✗	✓	✓	✓	✓	✗	✓
RTH 8.35/TC	✗	✗	✓	✓	✓	✓	✗	✓
RTH 8.39/TC	✗	✗	✓	✓	✓	✓	✗	✓
RTH 8.46/TC	✗	✗	✓	✓	✓	✓	✗	✓
RTH 8.51	✗	✗	✓	✓	✓	✓	✗	✓
RTH 10.37	✗	✗	✓	✓	✓	✓	✗	✓
RTH 13.26	✗	✗	✓	✓	✓	✓	✗	✓
TH 3.6	✗	✗	✗	✗	✗	✗	✗	✗
TH 3,5.7	✗	✗	✗	✗	✗	✗	✗	✗
TH 3,5.9	✗	✗	✗	✗	✗	✗	✗	✗
TH 4.15 S/SP	✗	✗	✗	✗	✗	✗	✗	✗
TH 4.19 S/SP	✗	✗	✗	✗	✗	✗	✗	✗
TH 4,5.19 P	✗	✗	✗	✗	✓	✗	✗	✗
TH 5.8 P	✗	✗	✗	✗	✓	✗	✗	✗
TH 5,5.15/P	✗	✗	✗	✗	✓	✗	✗	✗
TH 5,5.19 P	✗	✗	✗	✗	✓	✗	✗	✗
TH 5,5.24 P	✗	✗	✗	✗	✓	✗	✗	✗
TH 6.20 P	✗	✗	✗	✗	✓	✗	✗	✗
TH 7.10 P	✗	✗	✗	✗	✓	✗	✗	✗
HTH 10.10	✗	✗	✗	✗	✗	✗	✗	✗
HTH 12.10	✗	✗	✗	✗	✗	✗	✗	✗
HTH 16.10	✗	✗	✗	✗	✗	✗	✗	✗
HTH 20.10	✗	✗	✗	✗	✗	✗	✗	✗
HTH 25.11	✗	✗	✗	✗	✗	✗	✗	✗
HTH 27.11	✗	✗	✗	✗	✗	✗	✗	✗
HTH 35.12	✗	✗	✗	✗	✗	✗	✗	✗

✓: yes ✗: no

FORK CARRIAGES

Ideally suited to even the most demanding applications, like quarries and mines, our fork carriages can handle any job even under extreme conditions. From simple fork carriages to heavy-duty units with oversized forks, we have the best solution to get the job done.

Check the compatibility and capacity of each attachment with your dealer.

FLOATING FORK CARRIAGE 3 T

ATT-03-016

Fork carriage with a load capacity of 3,000 kg.
The 1,200 mm floating forks enable the load to be picked up even from uneven surfaces. The forks can be locked in the transport position for greater safety on the road.

FCS 3T FIX			
			RFID
3,000 kg	1,200 mm	220 mm (min.) - 1,036 mm (max.)	✓

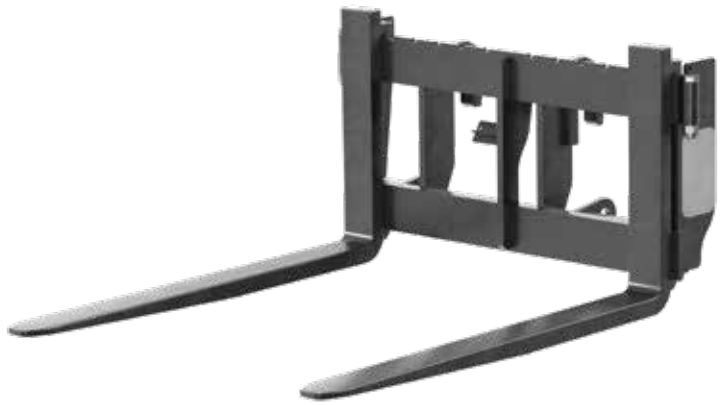

FEM FORK CARRIAGE 3 T

ATT-03-034

FEM fork carriage with a load capacity of 3,000 kg and width of 1,040 mm. The 1,200 mm long, laterally sliding forks are ideal for handling all types of palletised loads and any other application requiring non-floating forks.

FCFS 3T FIX			
			R.F.ID.
3,000 kg	1,200 mm	240 mm (min.) - 1,040 mm (max.)	✓

FEM FORK CARRIAGE 3 T WITH SIDESHIFT

ATT-03-066

FEM fork carriage with a load capacity of 3,000 kg and width of 1,100 mm. The 1,200 mm long laterally sliding forks are controlled directly from the cab with a hydraulic sideshift, and are ideal for handling all types of palletised loads and any other application requiring non-floating forks.

FCTF 3T FIX

			RFID
3,000 kg	1,200 mm	380 mm (min.) - 980 mm (max.)	✓

FEM FORK CARRIAGE 3 T - WITH SIDESHIFT AND POSITIONER

ATT-03-068

FEM fork carriage with a load capacity of 3,000 kg and width of 1,100 mm. The 1,200 mm long forks are ideal for handling all types of palletised loads and any other application requiring non-floating forks. Equipped with a positioner to hydraulically move the individual forks and a hydraulic sideshift to slide them laterally, directly from the cab.

FCPT 3T FIX

			R.F.I.D.
3,000 kg	1,200 mm	360 mm (min) - 1,030 mm (max)	✓

FEM FORK CARRIAGE 3 T - WITH POSITIONER

ATT-03-067

FEM fork carriage with a load capacity of 3,000 kg and width of 1,100 mm. The 1,200 mm long forks are ideal for handling all types of palletised loads and any other application requiring non-floating forks. Equipped with a positioner that moves the individual forks hydraulically.

FCS 3T FIX

			RFID
3,000 kg	1,200 mm	360 mm (min) - 1,030 mm (max)	✓

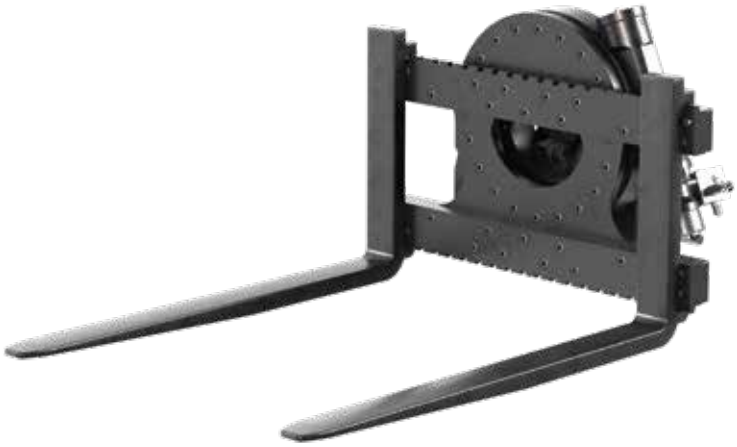

FEM FORK CARRIAGE 2.5 T, SIDE TIPPING - FOR EMPTYING BINS

ATT-03-054

FEM fork carriage with side tipping, enables the operator to quickly unload bins by tilting the fork carriage sideways.
Thanks to the continuous 360° rotation, the bins can easily be returned to the pick-up position in one smooth movement. With a load capacity of 2,500 kg, the unit is particularly suited to applications in agriculture, logistics and recycling, for optimised productivity and more efficient operation.

RFCFS 2,5 FIX

2,500 kg	1,200 mm	205 mm (min.) - 1,014 mm (max.)	360°

FLOATING FORK CARRIAGE 4.5 T

ATT-03-042

Fork carriage with a load capacity of 4,500 kg. The 1,200 mm floating forks enable the load to be picked up even from uneven surfaces. The forks can be locked in the transport position for greater safety on the road.

FC 4,5T FIX			
			RFID
4,500 kg	1,200 mm	600 mm (min.) - 1,040 mm (max.)	✓

FLOATING FORK CARRIAGE 5 T

ATT-03-039

Fork carriage with a load capacity of 5,000 kg. The 1,200 mm floating forks enable the load to be picked up even from uneven surfaces. The forks can be locked in the transport position for greater safety on the road.

FC 5T FIX			
			RFID
5,000 kg	1,200 mm	220 mm (min.) - 1,035 mm (max.)	✓

FLOATING FORK CARRIAGE 5.5 T

ATT-03-040

Fork carriage with a load capacity of 5,500 kg. The 1,200 mm floating forks enable the load to be picked up even from uneven surfaces. The forks can be locked in the transport position for greater safety on the road.

FC 5,5T FIX			
			RFID
5,500 kg	1,200 mm	220 mm (min.) - 1,035 mm (max.)	✓

FLOATING FORK CARRIAGE 6 T

ATT-03-004

Fork carriage with a load capacity of 6,000 kg. The 1,200 mm floating forks enable the load to be picked up even from uneven surfaces. The forks can be locked in the transport position for greater safety on the road.

FC 6T FIX L S			
			RFID
6,000 kg	1,200 mm	600 mm (min.) - 1,040 mm (max.)	✓

FLOATING FORK CARRIAGE 7 T

ATT-03-011

Fork carriage with a load capacity of 7,000 kg. The 1,200 mm floating forks enable the load to be picked up even from uneven surfaces. The forks can be locked in the transport position for greater safety on the road.

FC 7T FIX S

			RFID
7,000 kg	1,200 mm	600 mm (min.) - 1,040 mm (max.)	✓

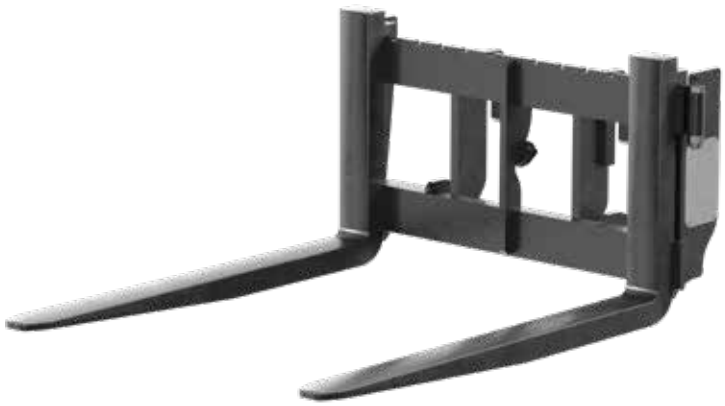

FEM FORK CARRIAGE 5 T

ATT-03-060

FEM fork carriage with a load capacity of 5,000 kg and width of 1,160 mm. The 1,200 mm long, laterally sliding forks are ideal for handling all types of palletised loads and any other application requiring non-floating forks.

FCF 5T I FIX

			RFID
5,000 kg	1,200 mm	240 mm (min.) - 1,036 mm (max.)	✓

FEM FORK CARRIAGE WITH SIDESHIFT

ATT-03-061

FEM fork carriage with a load capacity of 3,500 kg and width of 1,100 mm. The 1,200 mm long laterally sliding forks are controlled directly from the cab with a hydraulic sideshift, and are ideal for handling all types of palletised loads and any other application requiring non-floating forks.

FCTF 3.5T FIX

			RFID
3,500 kg	1,200 mm	380 mm (min.) - 980 mm (max.)	✓

FEM FORK CARRIAGE WITH POSITIONER

ATT-03-062

FEM fork carriage with a load capacity of 3,500 kg and width of 1,100 mm. The 1,200 mm long forks are ideal for handling all types of palletised loads and any other application requiring non-floating forks. Equipped with a positioner that moves the individual forks hydraulically.

FCPF 3.5 FIX

			RFID
3,500 kg	1,200 mm	360 mm (min) - 1,030 mm (max)	✓

FEM FORK CARRIAGE WITH SIDESHIFT AND POSITIONER

ATT-03-063

FEM fork carriage with a load capacity of 3,500 kg and width of 1,100 mm. The 1,200 mm long forks are ideal for handling all types of palletised loads and any other application requiring non-floating forks. Equipped with a positioner to hydraulically move the individual forks and a hydraulic sideshift to slide them laterally, directly from the cab.

FCTF 3.5 FIX

			RFID
3,500 kg	1,200 mm	360 mm (min) - 1,030 mm (max)	✓

FEM FORK CARRIAGE FOR TH

ATT-03-043

FEM fork carriage with a load capacity of 6,000 kg and width of 1,300 mm. The 1,200 mm long, laterally sliding forks are ideal for handling all types of palletised loads and any other application requiring non-floating forks.

FCF 1,3 FIX

			RFID
6,000 kg ** The actual capacity will depend on the machine to which the attachment is mounted (4.5 t; 5 t; 5.5 t)*	1,200 mm	280 mm (min.) - 1,300 mm (max.)	✓

FORK CARRIAGE - WITH POSITIONER

ATT-03-045

Fork carriage for the TH range (excluding TH 3.6), width of 1,026 mm. The 1,200 mm long forks are ideal for handling all types of palletised loads and any other application requiring non-floating forks. Equipped with a positioner that moves the individual forks hydraulically.

FCP FIX

6,000 kg ** The actual capacity will depend on the machine to which the attachment is mounted (4.5 t; 5 t; 5.5 t)*	1,200 mm	256 mm (min.) - 1,026 mm (max.)	RFID ✓

FEM FORK CARRIAGE WITH SIDESHIFT

ATT-03-044

FEM fork carriage with a load capacity of 5,000 kg and width of 1,200 mm. The 1,200 mm long laterally sliding forks are controlled directly form the cab with a hydraulic sideshift, and are ideal for handling all types of palletised loads and any other application requiring non-floating forks.

FCTF

5,000 kg ** The actual capacity will depend on the machine to which the attachment is mounted (4.5 t; 5 t; 5.5 t)*	1,200 mm	270 mm (min.) - 1,200 mm (max.)	100 mm	RFID ✓

FEM FORK CARRIAGE - WITH POSITIONER AND SIDESHIFT

ATT-03-046

Fork carriage for the TH range (excluding TH 3.6) with a width of 1,100 mm. The 1,200 mm long forks are ideal for handling all types of palletised loads and any other application requiring non-floating forks. Equipped with a positioner to hydraulically move the individual forks and a hydraulic sideshift to slide them laterally, directly from the cab.

FCPT FIX R

			RFID
6,000 kg ** The actual capacity will depend on the machine to which the attachment is mounted (4.5 t; 5 t; 5.5 t)*	1,200 mm	560 mm (min.) - 1,100 mm (max.)	✓

WIDE FORK CARRIAGE WITH LONG FORKS (72X72'')

ATT-03-048

Fork carriage for the TH range (excluding TH 3.6) with a width of 1,840 mm. Floating forks with an extended length of 1,830 mm allow bulky loads to be picked up even from uneven surfaces. The forks can be locked in the transport position for greater safety on the road.

FC 72x72 FIX

			RFID
4,500 kg ** The actual capacity will depend on the machine to which the attachment is mounted (4.5 t; 5 t; 5.5 t)*	1,830 mm	600 mm (min.) - 1,840 mm (max.)	✓

WIDE FORK CARRIAGE WITH LONG FORKS (72X60'')

ATT-03-049

Fork carriage for the TH range (excluding TH 3.6) with a width of 1,840 mm. Floating forks with an extended length of 1,520 mm allow bulky loads to be picked up even from uneven surfaces. The forks can be locked in the transport position for greater safety on the road.

FC 6x5 FIX

			RFID
4,500 kg ** The actual capacity will depend on the machine to which the attachment is mounted (4.5 t; 5 t; 5.5 t)*	1,520 mm	600 mm (min.) - 1,840 mm (max.)	✓

FLOATING FORK CARRIAGE 5 T

ATT-03-001

Fork carriage with a load capacity of 5,000 kg. The 1,200 mm floating forks enable the load to be picked up even from uneven surfaces. The forks can be locked in the transport position for greater safety on the road.

FC 5T

			RFID
5,000 kg	1,200 mm	520 mm (min.) - 1,040 mm (max.)	✓

FEM STANDARD FORK CARRIAGE, 5 T

ATT-03-003

FEM fork carriage with a load capacity of 5,000 kg and width of 1,300 mm. The 1,200 mm long, laterally sliding forks are ideal for handling all types of palletised loads and any other application requiring non-floating forks.

FCF 5T 1,3			
			RFID
5,000 kg	1,200 mm	260 mm (min.) - 1,300 mm (max.)	✓

FLOATING FORK CARRIAGE 6 T

ATT-03-006

Fork carriage with a load capacity of 6,000 kg. The 1,200 mm floating forks enable the load to be picked up even from uneven surfaces. The forks can be locked in the transport position for greater safety on the road.

FC 6T			
			RFID
6,000 kg	1,200 mm	330 mm (min.) - 1,040 mm (max.)	✓

FEM FORK CARRIAGE 6 T

ATT-03-010

FEM fork carriage with a load capacity of 6,000 kg and width of 1,300 mm. The 1,200 mm long, laterally sliding forks are ideal for handling all types of palletised loads and any other application requiring non-floating forks.

FCF 6T 1,3			
			RFID
6,000 kg	1,200 mm	280 mm (min.) - 1,310 mm (max.)	✓

FLOATING FORK CARRIAGE 6 T - WIDE VERSION - WITH 1,500 MM LONG FORKS

ATT-03-009

Fork carriage with a load capacity of 6,000 kg and width of 1,840 mm. Floating forks with an extended length of 1,550 mm allow bulky loads to be picked up even from uneven surfaces. The forks can be locked in the transport position for greater safety on the road. Grille for load protection and support included.

FC 6T 6x5 FT			
			RFID
6,000 kg	1,550 mm	740 mm (min.) - 1,840 mm (max.)	✓

FLOATING FORK CARRIAGE 6 T - WIDE VERSION - WITH 1,800 MM LONG FORKS

ATT-03-014

Fork carriage with a load capacity of 6,000 kg and width of 1,840 mm. Floating forks with an extended length of 1,830 mm allow bulky loads to be picked up even from uneven surfaces. The forks can be locked in the transport position for greater safety on the road.

FC 6T 72x72 FIX			
			RFID
6,000 kg	1,830 mm	700 mm (min.) - 1,840 mm (max.)	✓

FLOATING FORK CARRIAGE 8 T

ATT-03-015

Fork carriage with a load capacity of 8,000 kg. The 1,200 mm floating forks enable the load to be picked up even from uneven surfaces. The forks can be locked in the transport position for greater safety on the road.

FC 8T L			
			RFID
8,000 kg	1,200 mm	330 mm (min.) - 1,040 mm (max.)	✓

FLOATING FORK CARRIAGE 8 T

ATT-03-007

Fork carriage with a load capacity of 8,000 kg. The 1,200 mm floating forks enable the load to be picked up even from uneven surfaces. The forks can be locked in the transport position for greater safety on the road.

FC 8T 46 L			
			RFID
8,000 kg	1,200 mm	530 mm (min.) - 1,040 mm (max.)	✓

FLOATING FORK CARRIAGE 8 T - WIDE VERSION - WITH 1,800 MM LONG FORKS

ATT-03-017

Fork carriage with a load capacity of 8,000 kg and width of 1,840 mm. Floating forks with an extended length of 1,830 mm allow bulky loads to be picked up even from uneven surfaces. The forks can be locked in the transport position for greater safety on the road.

FC 8T 72x72			
			RFID
8,000 kg	1,830 mm	580 mm (min.) - 1,840 mm (max.)	✓

FORK CARRIAGE 8 T - WITH POSITIONER

ATT-03-035

Fork carriage with a load capacity of 8,000 kg and width of 1,126 mm. The 1,200 mm long forks are ideal for handling all types of palletised loads and any other application requiring non-floating forks.

FCP 8T			
			RFID
8,000 kg	1,200 mm	300 mm (min.) - 1,030 mm (max.)	✓

FORK CARRIAGE 8 T - WIDE VERSION - WITH 1,800 MM LONG FORKS AND POSITIONER

ATT-03-058

Fork carriage with a load capacity of 8,000 kg and width of 1,840 mm. The 1,830 mm extended length forks are ideal for handling bulky palletised loads and any other application requiring non-floating forks. Equipped with a positioner that moves the individual forks hydraulically.

FCP 8T 72x72			
			RFID
8,000 kg	1,840 mm	300 mm (min.) - 1,840 mm (max.)	✓

FEM FORK CARRIAGE 8 T

ATT-03-037

FEM fork carriage with a load capacity of 8,000 kg and width of 1,300 mm. The 1,200 mm long, laterally sliding forks are ideal for handling all types of palletised loads and any other application requiring non-floating forks.

FCF 8T SH 1,3			
			RFID
8,000 kg	1,200 mm	320 mm (min.) - 1,320 mm (max.)	✓

FLOATING FORK CARRIAGE 10 T

ATT-03-047

Fork carriage with a load capacity of 10,000 kg. The 1,200 mm floating forks enable the load to be picked up even from uneven surfaces. The forks can be locked in the transport position for greater safety on the road.

FC 10T			
			RFID
10,000 kg	1,200 mm	580 mm (min.) - 1,040 mm (max.)	✓

FLOATING FORK CARRIAGE 13 T WITH POSITIONER

ATT-03-021

Fork carriage with a load capacity of 13,000 kg. The 1,200 mm floating forks enable the load to be picked up even from uneven surfaces. Equipped with a positioner that moves the individual forks hydraulically. Grille for load protection and support included.

FCP 13T			
			RFID
13,000 kg	1,270 mm	850 mm (min.) - 1,780 mm (max.)	✓

FEM ROTATING FORK CARRIAGE WITH TILT

ATT-03-002

Rotating fork carriages with tilt function designed for handling bulky loads in tight spaces. Unlike standard forks, they can rotate and tilt, allowing the orientation of the load to be adjusted during loading and unloading. They offer a frontal load capacity of up to 5,000 kg, a rotated load capacity of up to 2,500 kg, 360° continuous rotation and a tilt of up to 70°.

RFCT 5				
				RFID
5,000 kg	1,200 mm	850 mm (min.)	360°	✓

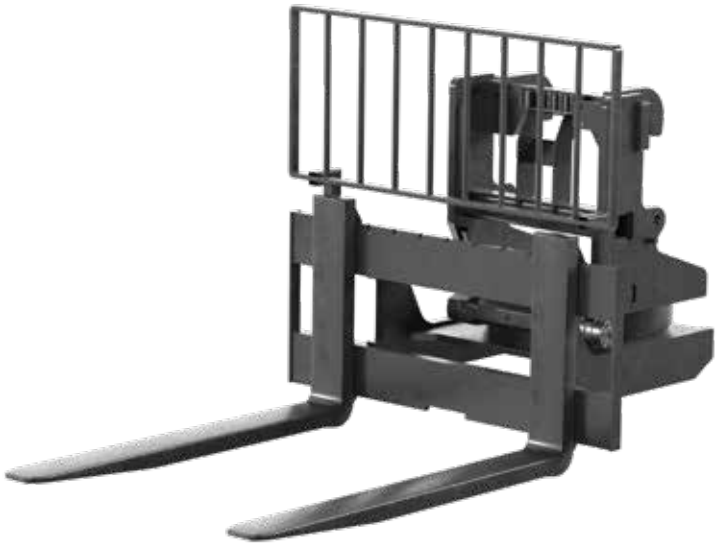

FEM ROTATING FORK CARRIAGE

ATT-03-041

Rotating FEM fork carriage designed for handling bulky materials in confined spaces. Full 360° rotation up to a height of 3 m. Above 3 m the maximum rotation is +/- 90°, automatically limited depending on the working conditions. The forks can be fitted with a manual rotation lock that reduces the working angle to +/- 90°. This attachment offers a frontal load capacity of 5,000 kg and 2,500 kg rotated load capacity. The frontal load capacity of the attachment will depend on the model of machine to which it is mounted.

RFC 5					
5,000 kg	1,200 mm	1,120 mm	45°	360°	✓

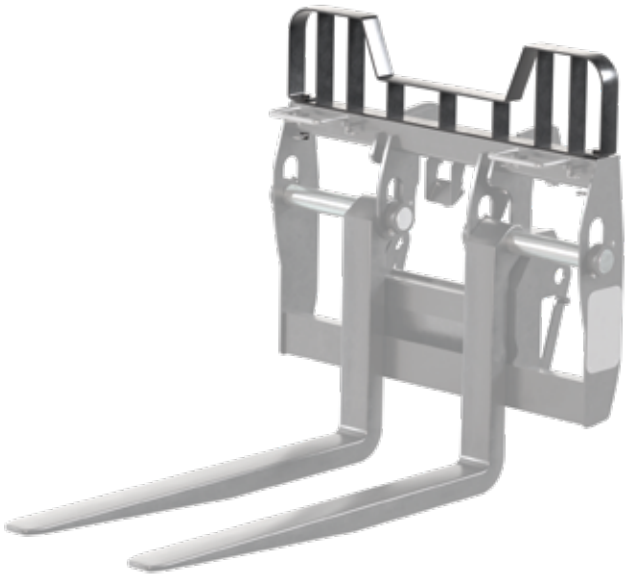

LOAD PROTECTION GRILLE FOR FLOATING FORK CARRIAGES

ATT-03-038

Grille for load protection and support that can be combined with floating fork carriages to retain the load and increase operator safety.

PC
250 x 60 mm

LOAD PROTECTION GRILLE FOR FEM FORK CARRIAGES

ATT-03-005

Grille for load protection and support that can be combined with FEM fork carriages to retain the load and increase operator safety.

PCF
1,140 x 620 mm

FLOATING FORK CARRIAGE 10 T

ATT-03-018

Fork carriage with a load capacity of 10,000 kg. The 1,500 mm floating forks enable the load to be picked up even from uneven surfaces. Grille for load protection and support included.

F 10T			
10,000 kg	1,500 mm	810 mm (min.) - 1,750 mm (max.)	✓

FLOATING FORK CARRIAGE 10 T WITH POSITIONER

ATT-03-019

Fork carriage with a load capacity of 10,000 kg. The 1,500 mm floating forks enable the load to be picked up even from uneven surfaces. Equipped with a positioner that moves the individual forks hydraulically. Grille for load protection and support included.

FCP 10T			
			RFID
10,000 kg	1,500 mm	820 mm (min.) - 1,740 mm (max.)	✓

FLOATING FORK CARRIAGE 10 T - WIDE VERSION - WITH 2,500 MM LONG FORKS AND POSITIONER

ATT-03-020

Fork carriage with a load capacity of 10,000 kg. The 2,500 mm extended length floating forks enable the load to be picked up even from uneven surfaces. Equipped with a positioner that moves the individual forks hydraulically. Grille for load protection and support included.

FCP 10T 2,5 C			
			RFID
10,000 kg	2,500 mm	820 mm (min.) - 2.300 mm (max.)	✓

FORK CARRIAGE 10 T - WIDE VERSION - WITH POSITIONER AND SIDESHIFT

ATT-03-036

Fork carriage with a load capacity of 10,000 kg. The 1,500 mm extended length floating forks enable the load to be picked up even from uneven surfaces. Equipped with a positioner to hydraulically move the individual forks and a hydraulic sideshift to slide them laterally, directly from the cab. Grille for load protection and support included.

FCPT 10T 1,5			
			RFID
10,000 kg	1,270 mm	580 mm (min.) - 1,040 mm (max.)	✓

FLOATING FORK CARRIAGE 12.2 T

ATT-03-013

Fork carriage with a load capacity of 12,250 kg. The 1,500 mm extended length floating forks enable the load to be picked up even from uneven surfaces. Grille for load protection and support included.

FC 12,2T			
			RFID
12,250 kg	1,500 mm	850 mm (min.) - 1,770 mm (max.)	✓

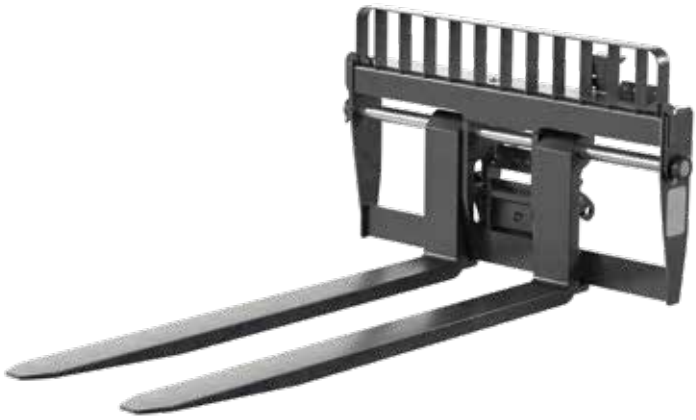

FLOATING FORK CARRIAGE 12.2 T WITH 2,500 MM LONG FORKS

ATT-03-050

Fork carriage with a load capacity of 12,250 kg. The 2,500 mm extended length floating forks enable the load to be picked up even from uneven surfaces. Grille for load protection and support included.

FC 12,2T 2,5			
			RFID
12,250 kg	2,500 mm	850 mm (min.) - 1,770 mm (max.)	✓

FLOATING FORK CARRIAGE 12.2 T WITH POSITIONER

ATT-03-051

Fork carriage with a load capacity of 12,200 kg. The 1,500 mm extended length floating forks enable the load to be picked up even from uneven surfaces. Equipped with a positioner that moves the individual forks hydraulically. Grille for load protection and support included.

FCP 12,2T			
			RFID
12,200 kg	1,500 mm	850 mm (min.) - 1,770 mm (max.)	✓

FLOATING FORK CARRIAGE 12.2 T WITH 2,500 MM LONG FORKS AND POSITIONER

ATT-03-052

Fork carriage with a load capacity of 12,200 kg. The 2,500 mm floating forks enable the load to be picked up even from uneven surfaces. Equipped with a positioner that moves the individual forks hydraulically. Grille for load protection and support included.

FCP 12,2T 2,5			
			RFID
12,200 kg	2,500 mm	850 mm (min.) - 1,770 mm (max.)	✓

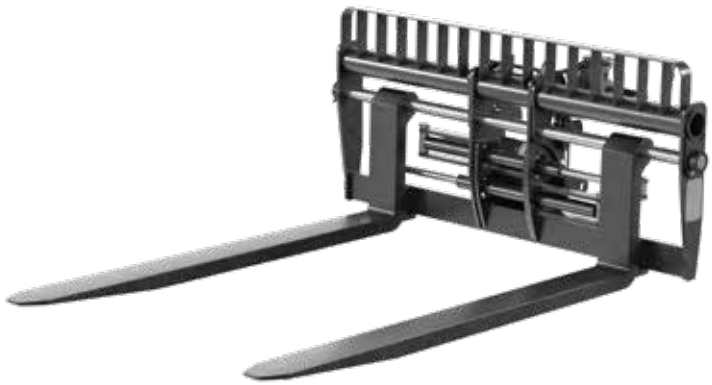

FLOATING FORK CARRIAGE 12.2 T WITH FORKS FOR CONTAINERS AND POSITIONER

ATT-03-053

Fork carriage with a load capacity of 12,200 kg. The 2,500 mm long, 2,300 mm wide forks are ideal for container handling. Equipped with a positioner that moves the individual forks hydraulically. Grille for load protection and support included.

FCP 12,2T 2,5 C			
			RFID
12,200 kg	2,500 mm	850 mm (min.) - 2,300 mm (max.)	✓

FLOATING FORK CARRIAGE 16 T

ATT-03-022

Fork carriage with a load capacity of 16,000 kg. The 1,500 mm floating forks enable the load to be picked up even from uneven surfaces. Grille for load protection and support included.

F 16T			
			RFID
16,000 kg	1,500 mm	1,130 mm (min.) - 2,000 mm (max.)	✓

FLOATING FORK CARRIAGE 16 T WITH POSITIONER

ATT-03-023

Fork carriage with a load capacity of 16,000 kg. The 1,500 mm floating forks enable the load to be picked up even from uneven surfaces. Equipped with a positioner that moves the individual forks hydraulically. Grille for load protection and support included.

FCP 16T				
				RFID
16,000 kg	1,500 mm	1,160 mm (min.) - 2,000 mm (max.)	+/- 300 mm	✓

FLOATING FORK CARRIAGE 16 T WITH 2,400 MM LONG FORKS, AND POSITIONER

ATT-03-024

Fork carriage with a load capacity of 16,000 kg. The 2,400 mm extended length floating forks enable the load to be picked up even from uneven surfaces. Equipped with a positioner to hydraulically move the individual forks and a hydraulic sideshift to slide them laterally, directly from the cab. Grille for load protection and support included.

FCPT 16 2,4

				RFID
16,000 kg	2,400 mm	570 mm (min.) - 1,990 mm (max.)	+/- 300 mm	✓

FLOATING FORK CARRIAGE 16 T - WIDE - WITH 2,400 MM LONG FORKS AND POSITIONER - VERSION

ATT-03-025

Fork carriage with a load capacity of 16,000 kg. The 2,400 mm extended length floating forks enable the load to be picked up even from uneven surfaces. Equipped with a positioner that moves the individual forks hydraulically. Grille for load protection and support included.

FCPT 16T C

			RFID
16,000 kg	2,400 mm	1,268 mm (min.) - 2,300 mm (max.)	✓

FLOATING FORK CARRIAGE 20 T WITH POSITIONER

ATT-03-026

Fork carriage with 20,000 kg load capacity. The 1,500 mm floating forks enable the load to be picked up even from uneven surfaces. Equipped with a positioner that moves the individual forks hydraulically. Grille for load protection and support included.

FCP 20T			
			RFID
20,000 kg	1,500 mm	1,160 mm (min.) - 2,000 mm (max.)	✓

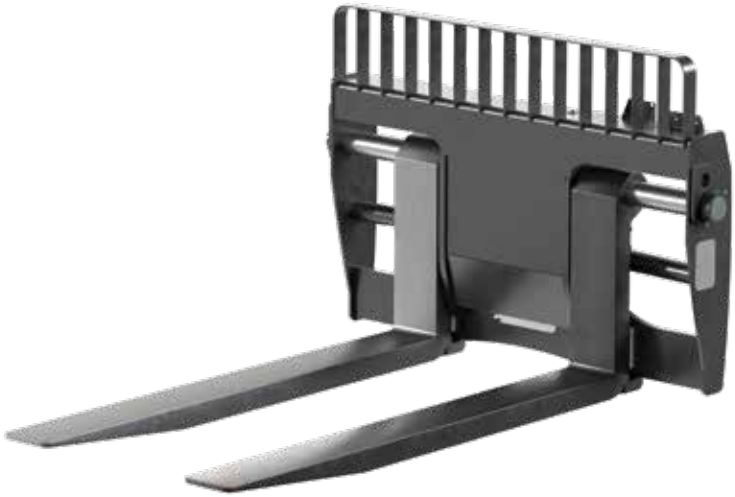

FORK CARRIAGE 25 T - WITH 2,400 MM LONG FORKS

ATT-03-057

Fork carriage with a load capacity of 25,000 kg. The 2,400 mm extended length forks are ideal for picking bulky loads, even on uneven surfaces.

F 25T			
			RFID
25,000 kg	2,400 mm	1,240 mm (min.) - 2,000 mm (max.)	✓

FORK CARRIAGE 25 T - WIDE VERSION - WITH 2,400 MM LONG FORKS AND POSITIONER

ATT-03-055

Fork carriage with a load capacity of 25,000 kg. The 2,400 mm extended length forks enable the load to be picked up even from uneven surfaces. Equipped with a positioner that moves the individual forks hydraulically. Grille for load protection and support included.

FCP 25T 2,4			
			RFID
25,000 kg	2,400 mm	1,235 mm (min) - 2,315 mm (max)	✓

FORK CARRIAGE 25 T - WIDE VERSION - WITH 2,400 MM LONG FORKS, POSITIONER AND SIDESHIFT

ATT-03-056

Fork carriage with a load capacity of 25,000 kg. The 2,400 mm extended length forks enable the load to be picked up even from uneven surfaces. Equipped with a positioner to hydraulically move the individual forks and a hydraulic sideshift to slide them laterally, directly from the cab.

FCPT 25T			
			RFID
25,000 kg	2,400 mm	730 mm (min.) - 2.550 mm (max.)	✓

FLOATING FORK CARRIAGE 27 T - WITH POSITIONER

ATT-03-029

Fork carriage with a load capacity of 27,000 kg. The 2,400 mm extended length floating forks enable the load to be picked up even from uneven surfaces. Equipped with a positioner that moves the individual forks hydraulically. Grille for load protection and support included.

FCP 27T			
			RFID
27,000 kg	2,400 mm	1,430 mm (min.) - 2,400 mm (max.)	✓

FLOATING FORK CARRIAGE 30 T WITH POSITIONER

ATT-03-030

Fork carriage with a load capacity of 30,000 kg. The 2,400 mm extended length floating forks enable the load to be picked up even from uneven surfaces. Equipped with a positioner that moves the individual forks hydraulically. Grille for load protection and support included.

FCP 30T			
			RFID
30,000 kg	2,400 mm	1,360 mm (min.) - 1,990 mm (max.)	✓

FLOATING FORK CARRIAGE 30 T, ADJUSTABLE WIDTH, WITH POSITIONER

ATT-03-032

Fork carriage with a load capacity of 30,000 kg. The 2,400 mm extended length and lowered floating forks enable the load to be picked up even from uneven surfaces. Equipped with a positioner that moves the individual forks hydraulically. Grille for load protection and support included.

FCEP 30T 2,4 R

			RFID
30,000 kg	2,400 mm	1.,60 mm (min) - 2,500 mm (max)	✓

FLOATING FORK CARRIAGE 30 T - WIDE VERSION - WITH POSITIONER AND SIDESHIFT

ATT-03-031

Fork carriage with a load capacity of 30,000 kg. The 2,400 mm extended length floating forks enable the load to be picked up even from uneven surfaces. Equipped with a positioner to hydraulically move the individual forks and a hydraulic sideshift to slide them laterally, directly from the cab.

FCPT 30T 2,4 R

				RFID
30,000 kg	2,400 mm	830 mm (min.) - 2,650 mm (max)	+/- 300 mm	✓

FLOATING FORK CARRIAGE 35 T WITH POSITIONER

ATT-03-033

Fork carriage with a load capacity of 35,000 kg. The 2,400 mm extended length floating forks enable the load to be picked up even from uneven surfaces. Equipped with a positioner that moves the individual forks hydraulically. Grille for load protection and support included.

FCP 35T			
			RFID
35,000 kg	2,400 mm	1,400 mm (min.) - 2,030 mm (max.)	✓

COMPATIBILITY

	ATT-**03-001**	ATT-**03-002**	ATT-**03-003**	ATT-**03-004**	ATT-**03-006**	ATT-**03-007**	ATT-**03-009**
RTH 5.18	✓	✓	✓	✗	✓	✗	✓
RTH 5.21	✓	✓	✓	✗	✓	✗	✓
RTH 5.23	✓	✓	✓	✗	✓	✗	✓
RTH 5.25	✓	✓	✓	✗	✓	✗	✓
RTH 6.22 EC/TC	✓	✓	✓	✗	✓	✗	✓
RTH 6.26 EC/TC	✓	✓	✓	✗	✓	✗	✓
RTH 6.31 EC/TC	✓	✓	✓	✗	✓	✗	✓
RTH 8.27/TC	✓	✓	✓	✗	✓	✗	✓
RTH 8.35/TC	✓	✓	✓	✗	✓	✗	✓
RTH 8.39/TC	✓	✓	✓	✗	✓	✗	✓
RTH 8.46/TC	✓	✓	✓	✗	✓	✓	✓
RTH 8.51	✓	✓	✓	✗	✓	✓	✓
RTH 10.37	✓	✓	✓	✗	✓	✗	✓
RTH 13.26	✓	✓	✓	✗	✓	✗	✓
TH 3.6	✗	✗	✗	✗	✗	✗	✗
TH 3,5.7	✗	✗	✗	✗	✗	✗	✗
TH 3,5.9	✗	✗	✗	✗	✗	✗	✗
TH 4.15 S/SP	✗	✗	✗	✗	✗	✗	✗
TH 4.19 S/SP	✗	✗	✗	✗	✗	✗	✗
TH 4,5.19 P	✗	✓	✗	✓	✗	✗	✗
TH 5.8 P	✗	✓	✗	✓	✗	✗	✗
TH 5,5.15/P	✗	✓	✗	✓	✗	✗	✗
TH 5,5.19 P	✗	✓	✗	✓	✗	✗	✗
TH 5,5.24 P	✗	✓	✗	✓	✗	✗	✗
TH 6.20 P	✗	✓	✗	✓	✗	✗	✗
TH 7.10 P	✗	✓	✗	✓	✗	✗	✗
HTH 10.10	✗	✗	✗	✗	✗	✗	✗
HTH 12.10	✗	✗	✗	✗	✗	✗	✗
HTH 16.10	✗	✗	✗	✗	✗	✗	✗
HTH 20.10	✗	✗	✗	✗	✗	✗	✗
HTH 25.11	✗	✗	✗	✗	✗	✗	✗
HTH 27.11	✗	✗	✗	✗	✗	✗	✗
HTH 35.12	✗	✗	✗	✗	✗	✗	✗

	ATT-**03-010**	ATT-**03-011**	ATT-**03-013**	ATT-**03-014**	ATT-**03-15**	ATT-**03-016**	ATT-**03-017**
RTH 5.18	✓	X	X	✓	✓	X	✓
RTH 5.21	✓	X	X	✓	✓	X	✓
RTH 5.23	✓	X	X	✓	✓	X	✓
RTH 5.25	✓	X	X	✓	✓	X	✓
RTH 6.22 EC/TC	✓	X	X	✓	✓	X	✓
RTH 6.26 EC/TC	✓	X	X	✓	✓	X	✓
RTH 6.31 EC/TC	✓	X	X	✓	✓	X	✓
RTH 8.27/TC	✓	X	X	✓	✓	X	✓
RTH 8.35/TC	✓	X	X	✓	✓	X	✓
RTH 8.39/TC	✓	X	X	✓	✓	X	✓
RTH 8.46/TC	✓	X	X	✓	✓	X	X
RTH 8.51	✓	X	X	✓	✓	X	X
RTH 10.37	✓	X	X	✓	✓	X	✓
RTH 13.26	✓	X	X	✓	✓	X	✓
TH 3.6	X	X	X	X	X	✓	X
TH 3,5.7	X	X	X	X	X	X	X
TH 3,5.9	X	X	X	X	X	X	X
TH 4.15 S/SP	X	X	X	X	X	X	X
TH 4.19 S/SP	X	X	X	X	X	X	X
TH 4,5.19 P	X	✓	X	X	X	X	X
TH 5.8 P	X	✓	X	X	X	X	X
TH 5,5.15/P	X	✓	X	X	X	X	X
TH 5,5.19 P	X	✓	X	X	X	X	X
TH 5,5.24 P	X	✓	X	X	X	X	X
TH 6.20 P	X	✓	X	X	X	X	X
TH 7.10 P	X	✓	X	X	X	X	X
HTH 10.10	X	X	✓	X	X	X	X
HTH 12.10	X	X	✓	X	X	X	X
HTH 16.10	X	X	X	X	X	X	X
HTH 20.10	X	X	X	X	X	X	X
HTH 25.11	X	X	X	X	X	X	X
HTH 27.11	X	X	X	X	X	X	X
HTH 35.12	X	X	X	X	X	X	X

✓: yes X: no

COMPATIBILITY

	ATT-**03-018**	ATT-**03-019**	ATT-**03-020**	ATT-**03-021**	ATT-**03-022**	ATT-**03-023**	ATT-**03-024**
RTH 5.18	✗	✗	✗	✓	✗	✗	✗
RTH 5.21	✗	✗	✗	✓	✗	✗	✗
RTH 5.23	✗	✗	✗	✓	✗	✗	✗
RTH 5.25	✗	✗	✗	✓	✗	✗	✗
RTH 6.22 EC/TC	✗	✗	✗	✓	✗	✗	✗
RTH 6.26 EC/TC	✗	✗	✗	✓	✗	✗	✗
RTH 6.31 EC/TC	✗	✗	✗	✓	✗	✗	✗
RTH 8.27/TC	✗	✗	✗	✓	✗	✗	✗
RTH 8.35/TC	✗	✗	✗	✓	✗	✗	✗
RTH 8.39/TC	✗	✗	✗	✓	✗	✗	✗
RTH 8.46/TC	✗	✗	✗	✓	✗	✗	✗
RTH 8.51	✗	✗	✗	✓	✗	✗	✗
RTH 10.37	✗	✗	✗	✓	✗	✗	✗
RTH 13.26	✗	✗	✗	✓	✗	✗	✗
TH 3.6	✗	✗	✗	✗	✗	✗	✗
TH 3,5.7	✗	✗	✗	✗	✗	✗	✗
TH 3,5.9	✗	✗	✗	✗	✗	✗	✗
TH 4.15 S/SP	✗	✗	✗	✗	✗	✗	✗
TH 4.19 S/SP	✗	✗	✗	✗	✗	✗	✗
TH 4,5.19 P	✗	✗	✗	✗	✗	✗	✗
TH 5.8 P	✗	✗	✗	✗	✗	✗	✗
TH 5,5.15/P	✗	✗	✗	✗	✗	✗	✗
TH 5,5.19 P	✗	✗	✗	✗	✗	✗	✗
TH 5,5.24 P	✗	✗	✗	✗	✗	✗	✗
TH 6.20 P	✗	✗	✗	✗	✗	✗	✗
TH 7.10 P	✗	✗	✗	✗	✗	✗	✗
HTH 10.10	✓	✓	✓	✗	✗	✗	✗
HTH 12.10	✓	✓	✓	✗	✗	✗	✗
HTH 16.10	✗	✗	✗	✗	✓	✓	✓
HTH 20.10	✗	✗	✗	✗	✓	✓	✓
HTH 25.11	✗	✗	✗	✗	✓	✓	✓
HTH 27.11	✗	✗	✗	✗	✓	✓	✓
HTH 35.12	✗	✗	✗	✗	✓	✓	✓

	ATT-**03-025**	ATT-**03-026**	ATT-**03-029**	ATT-**03-030**	ATT-**03-031**	ATT-**03-032**	ATT-**03-033**
RTH 5.18	X	X	X	X	X	X	X
RTH 5.21	X	X	X	X	X	X	X
RTH 5.23	X	X	X	X	X	X	X
RTH 5.25	X	X	X	X	X	X	X
RTH 6.22 EC/TC	X	X	X	X	X	X	X
RTH 6.26 EC/TC	X	X	X	X	X	X	X
RTH 6.31 EC/TC	X	X	X	X	X	X	X
RTH 8.27/TC	X	X	X	X	X	X	X
RTH 8.35/TC	X	X	X	X	X	X	X
RTH 8.39/TC	X	X	X	X	X	X	X
RTH 8.46/TC	X	X	X	X	X	X	X
RTH 8.51	X	X	X	X	X	X	X
RTH 10.37	X	X	X	X	X	X	X
RTH 13.26	X	X	X	X	X	X	X
TH 3.6	X	X	X	X	X	X	X
TH 3,5.7	X	X	X	X	X	X	X
TH 3,5.9	X	X	X	X	X	X	X
TH 4.15 S/SP	X	X	X	X	X	X	X
TH 4.19 S/SP	X	X	X	X	X	X	X
TH 4,5.19 P	X	X	X	X	X	X	X
TH 5.8 P	X	X	X	X	X	X	X
TH 5,5.15/P	X	X	X	X	X	X	X
TH 5,5.19 P	X	X	X	X	X	X	X
TH 5,5.24 P	X	X	X	X	X	X	X
TH 6.20 P	X	X	X	X	X	X	X
TH 7.10 P	X	X	X	X	X	X	X
HTH 10.10	X	X	X	X	X	X	X
HTH 12.10	X	X	X	X	X	X	X
HTH 16.10	✓	✓	✓	✓	✓	✓	✓
HTH 20.10	✓	✓	✓	✓	✓	✓	✓
HTH 25.11	✓	✓	✓	✓	✓	✓	✓
HTH 27.11	✓	✓	✓	✓	✓	✓	✓
HTH 35.12	✓	✓	✓	✓	✓	✓	✓

✓: yes X: no

COMPATIBILITY

	ATT-**03-034**	ATT-**03-035**	ATT-**03-036**	ATT-**03-037**	ATT-**03-039**	ATT-**03-040**	ATT-**03-041**
RTH 5.18	✗	✗	✗	✓	✗	✗	✓
RTH 5.21	✗	✗	✗	✓	✗	✗	✓
RTH 5.23	✗	✗	✗	✓	✗	✗	✓
RTH 5.25	✗	✗	✗	✓	✗	✗	✓
RTH 6.22 EC/TC	✗	✗	✗	✓	✗	✗	✓
RTH 6.26 EC/TC	✗	✗	✗	✓	✗	✗	✓
RTH 6.31 EC/TC	✗	✗	✗	✓	✗	✗	✓
RTH 8.27/TC	✗	✓	✗	✓	✗	✗	✓
RTH 8.35/TC	✗	✓	✗	✓	✗	✗	✓
RTH 8.39/TC	✗	✓	✗	✓	✗	✗	✓
RTH 8.46/TC	✗	✗	✗	✓	✗	✗	✓
RTH 8.51	✗	✗	✗	✓	✗	✗	✓
RTH 10.37	✗	✗	✗	✓	✗	✗	✓
RTH 13.26	✗	✗	✗	✓	✗	✗	✓
TH 3.6	✓	✗	✗	✗	✗	✗	✗
TH 3,5.7	✗	✗	✗	✗	✓	✗	✗
TH 3,5.9	✗	✗	✗	✗	✓	✗	✗
TH 4.15 S/SP	✗	✗	✗	✗	✗	✗	✗
TH 4.19 S/SP	✗	✗	✗	✗	✗	✗	✗
TH 4,5.19 P	✗	✗	✗	✗	✗	✓	✓
TH 5.8 P	✗	✗	✗	✗	✓	✓	✓
TH 5,5.15/P	✗	✗	✗	✗	✗	✓	✓
TH 5,5.19 P	✗	✗	✗	✗	✗	✓	✓
TH 5,5.24 P	✗	✗	✗	✗	✗	✗	✓
TH 6.20 P	✗	✗	✗	✗	✗	✗	✓
TH 7.10 P	✗	✗	✗	✗	✗	✓	✓
HTH 10.10	✗	✗	✓	✗	✗	✗	✗
HTH 12.10	✗	✗	✓	✗	✗	✗	✗
HTH 16.10	✗	✗	✗	✗	✗	✗	✗
HTH 20.10	✗	✗	✗	✗	✗	✗	✗
HTH 25.11	✗	✗	✗	✗	✗	✗	✗
HTH 27.11	✗	✗	✗	✗	✗	✗	✗
HTH 35.12	✗	✗	✗	✗	✗	✗	✗

	ATT-**03-042**	ATT-**03-043**	ATT-**03-044**	ATT-**03-045**	ATT-**03-046**	ATT-**03-047**	ATT-**03-048**
RTH 5.18	X	X	X	X	X	✓	X
RTH 5.21	X	X	X	X	X	✓	X
RTH 5.23	X	X	X	X	X	✓	X
RTH 5.25	X	X	X	X	X	✓	X
RTH 6.22 EC/TC	X	X	X	X	X	✓	X
RTH 6.26 EC/TC	X	X	X	X	X	✓	X
RTH 6.31 EC/TC	X	X	X	X	X	✓	X
RTH 8.27/TC	X	X	X	X	X	✓	X
RTH 8.35/TC	X	X	X	X	X	✓	X
RTH 8.39/TC	X	X	X	X	X	✓	X
RTH 8.46/TC	X	X	X	X	X	✓	X
RTH 8.51	X	X	X	X	X	✓	X
RTH 10.37	X	X	X	X	X	✓	X
RTH 13.26	X	X	X	X	X	✓	X
TH 3.6	X	X	X	X	X	X	X
TH 3,5.7	X	X	X	X	X	X	X
TH 3,5.9	X	X	X	X	X	X	X
TH 4.15 S/SP	✓	X	X	X	X	X	✓
TH 4.19 S/SP	✓	X	X	X	X	X	✓
TH 4,5.19 P	✓	✓	✓	✓	✓	X	✓
TH 5.8 P	✓	✓	✓	✓	✓	X	✓
TH 5,5.15/P	✓	✓	✓	✓	✓	X	✓
TH 5,5.19 P	✓	✓	✓	✓	✓	X	✓
TH 5,5.24 P	✓	✓	✓	✓	✓	X	✓
TH 6.20 P	X	✓	✓	✓	✓	X	✓
TH 7.10 P	✓	✓	✓	✓	✓	X	✓
HTH 10.10	X	X	X	X	X	X	X
HTH 12.10	X	X	X	X	X	X	X
HTH 16.10	X	X	X	X	X	X	X
HTH 20.10	X	X	X	X	X	X	X
HTH 25.11	X	X	X	X	X	X	X
HTH 27.11	X	X	X	X	X	X	X
HTH 35.12	X	X	X	X	X	X	X

✓: yes X: no

COMPATIBILITY

	ATT-**03-049**	ATT-**03-050**	ATT-**03-051**	ATT-**03-052**	ATT-**03-053**	ATT-**03-054**	ATT-**03-055**
RTH 5.18	✗	✗	✗	✗	✗	✗	✗
RTH 5.21	✗	✗	✗	✗	✗	✗	✗
RTH 5.23	✗	✗	✗	✗	✗	✗	✗
RTH 5.25	✗	✗	✗	✗	✗	✗	✗
RTH 6.22 EC/TC	✗	✗	✗	✗	✗	✗	✗
RTH 6.26 EC/TC	✗	✗	✗	✗	✗	✗	✗
RTH 6.31 EC/TC	✗	✗	✗	✗	✗	✗	✗
RTH 8.27/TC	✗	✗	✗	✗	✗	✗	✗
RTH 8.35/TC	✗	✗	✗	✗	✗	✗	✗
RTH 8.39/TC	✗	✗	✗	✗	✗	✗	✗
RTH 8.46/TC	✗	✗	✗	✗	✗	✗	✗
RTH 8.51	✗	✗	✗	✗	✗	✗	✗
RTH 10.37	✗	✗	✗	✗	✗	✗	✗
RTH 13.26	✗	✗	✗	✗	✗	✗	✗
TH 3.6	✗	✗	✗	✗	✗	✓	✗
TH 3,5.7	✗	✗	✗	✗	✗	✗	✗
TH 3,5.9	✗	✗	✗	✗	✗	✗	✗
TH 4.15 S/SP	✓	✗	✗	✗	✗	✗	✗
TH 4.19 S/SP	✓	✗	✗	✗	✗	✗	✗
TH 4,5.19 P	✓	✗	✗	✗	✗	✗	✗
TH 5.8 P	✓	✗	✗	✗	✗	✗	✗
TH 5,5.15/P	✓	✗	✗	✗	✗	✗	✗
TH 5,5.19 P	✓	✗	✗	✗	✗	✗	✗
TH 5,5.24 P	✓	✗	✗	✗	✗	✗	✗
TH 6.20 P	✓	✗	✗	✗	✗	✗	✗
TH 7.10 P	✓	✗	✗	✗	✗	✗	✗
HTH 10.10	✗	✓	✓	✓	✓	✗	✗
HTH 12.10	✗	✓	✓	✓	✓	✗	✗
HTH 16.10	✗	✗	✗	✗	✗	✗	✓
HTH 20.10	✗	✗	✗	✗	✗	✗	✓
HTH 25.11	✗	✗	✗	✗	✗	✗	✓
HTH 27.11	✗	✗	✗	✗	✗	✗	✓
HTH 35.12	✗	✗	✗	✗	✗	✗	✓

	ATT-**03-056**	ATT-**03-057**	ATT-**03-058**	ATT-**03-060**	ATT-**03-061**	ATT-**03-062**	ATT-**03-063**
RTH 5.18	X	X	✓	X	X	X	X
RTH 5.21	X	X	✓	X	X	X	X
RTH 5.23	X	X	✓	X	X	X	X
RTH 5.25	X	X	✓	X	X	X	X
RTH 6.22 EC/TC	X	X	✓	X	X	X	X
RTH 6.26 EC/TC	X	X	✓	X	X	X	X
RTH 6.31 EC/TC	X	X	✓	X	X	X	X
RTH 8.27/TC	X	X	✓	X	X	X	X
RTH 8.35/TC	X	X	✓	X	X	X	X
RTH 8.39/TC	X	X	✓	X	X	X	X
RTH 8.46/TC	X	X	X	X	X	X	X
RTH 8.51	X	X	X	X	X	X	X
RTH 10.37	X	X	X	X	X	X	X
RTH 13.26	X	X	X	X	X	X	X
TH 3.6	X	X	X	X	X	X	X
TH 3,5.7	X	X	X	✓	✓	✓	✓
TH 3,5.9	X	X	X	✓	✓	✓	✓
TH 4.15 S/SP	X	X	X	X	X	X	X
TH 4.19 S/SP	X	X	X	X	X	X	X
TH 4,5.19 P	X	X	X	X	X	X	X
TH 5.8 P	X	X	X	X	X	X	X
TH 5,5.15/P	X	X	X	X	X	X	X
TH 5,5.19 P	X	X	X	X	X	X	X
TH 5,5.24 P	X	X	X	X	X	X	X
TH 6.20 P	X	X	X	X	X	X	X
TH 7.10 P	X	X	X	X	X	X	X
HTH 10.10	X	X	X	X	X	X	X
HTH 12.10	X	X	X	X	X	X	X
HTH 16.10	✓	✓	X	X	X	X	X
HTH 20.10	✓	✓	X	X	X	X	X
HTH 25.11	✓	✓	X	X	X	X	X
HTH 27.11	✓	✓	X	X	X	X	X
HTH 35.12	✓	✓	X	X	X	X	X

✓: yes X: no

	ATT-**03-066**	ATT-**03-067**	ATT-**03-068**
RTH 5.18	✗	✗	✗
RTH 5.21	✗	✗	✗
RTH 5.23	✗	✗	✗
RTH 5.25	✗	✗	✗
RTH 6.22 EC/TC	✗	✗	✗
RTH 6.26 EC/TC	✗	✗	✗
RTH 6.31 EC/TC	✗	✗	✗
RTH 8.27/TC	✗	✗	✗
RTH 8.35/TC	✗	✗	✗
RTH 8.39/TC	✗	✗	✗
RTH 8.46/TC	✗	✗	✗
RTH 8.51	✗	✗	✗
RTH 10.37	✗	✗	✗
RTH 13.26	✗	✗	✗
TH 3.6	✓	✓	✓
TH 3,5.7	✗	✗	✗
TH 3,5.9	✗	✗	✗
TH 4.15 S/SP	✗	✗	✗
TH 4.19 S/SP	✗	✗	✗
TH 4,5.19 P	✗	✗	✗
TH 5.8 P	✗	✗	✗
TH 5,5.15/P	✗	✗	✗
TH 5,5.19 P	✗	✗	✗
TH 5,5.24 P	✗	✗	✗
TH 6.20 P	✗	✗	✗
TH 7.10 P	✗	✗	✗
HTH 10.10	✗	✗	✗
HTH 12.10	✗	✗	✗
HTH 16.10	✗	✗	✗
HTH 20.10	✗	✗	✗
HTH 25.11	✗	✗	✗
HTH 27.11	✗	✗	✗
HTH 35.12	✗	✗	✗

LATTICE BOOMS WITH/ WITHOUT WINCH

Precise and versatile, lattice booms are the ideal solution, whatever the job. They easily adapt to varying conditions, always offering the best solution to any problem.

Check the compatibility and capacity of each attachment with your dealer.

LATTICE BOOM WITH SINGLE PULL WINCH 800 KG

ATT-04-005

Lattice boom with integral winch, extends the reach by an additional 7 metres. Ideal for handling light and bulky loads, even in hard-to-reach areas. Maximum load capacity of 800 kg. Tubular structure to improve the weight/capacity ratio. The winch is equipped with a rope pressure roller and hydraulic limit switch system for rope raising/ lowering.

JW 800					
					RFID
800 kg	7,293 mm	10 mm	30 m	60 m/min	✓

LATTICE BOOM WITH SINGLE PULL WINCH 900 KG

ATT-04-028

Lattice boom with integral winch, extends the reach by an additional 3.85 metres. Ideal for handling light and bulky loads, even in hard-to-reach areas. Maximum capacity of 900 kg. Tubular structure to improve the weight/capacity ratio. The winch is equipped with a rope pressure roller and hydraulic limit switch system for rope raising/lowering.

JW 900					
					RFID
900 kg	3,850 mm	10 mm	24/44 m	48/24 m/min	✓

LATTICE BOOM WITH SINGLE PULL WINCH 1.5 T

ATT-04-011

Lattice boom with integral winch, extends the reach by an additional 2.2 metres. Ideal for handling light and bulky loads, even in hard-to-reach areas. Maximum capacity of 1,500 kg. Tubular structure to improve the weight/capacity ratio. The winch is equipped with a rope pressure roller and hydraulic limit switch system for rope raising/lowering.

JW 1500					
					RFID
1,500 kg	2,160 mm	10 mm	24 m	52 m/min	✓

LATTICE BOOM WITH DOUBLE PULL WINCH 2 T

ATT-04-015

Lattice boom with integral winch, extends the reach by an additional 2 metres. Ideal for handling light and bulky loads, even in hard-to-reach areas. Maximum capacity of 2,000 kg. Tubular structure to improve the weight/capacity ratio. The winch is equipped with a rope pressure roller and hydraulic limit switch system for rope raising/lowering.

JW 2000					
					RFID
2,000 kg	2,390 mm	10 mm	24 m	24 m/min	✓

LATTICE BOOM WITH SINGLE PULL WINCH 2.7 T

ATT-04-017

Lattice boom with integral winch, extends the reach by an additional 1.7 metres. Ideal for handling light and bulky loads, even in hard-to-reach areas. Maximum capacity of 2,700 kg. Tubular structure to improve the weight/capacity ratio. The winch is equipped with a rope pressure roller and hydraulic limit switch system for rope raising/lowering.

JW 2700					
					RFID
2,700 kg	1,700 mm	12 mm	50 m	30 m/min	✓

LATTICE BOOM WITH SINGLE PULL WINCH 3 T

ATT-04-019

Lattice boom with integral winch, extends the reach by an additional 1.7 metres. Ideal for handling light and bulky loads, even in hard-to-reach areas. Maximum capacity of 3,000 kg. Tubular structure to improve the weight/capacity ratio.
The winch is equipped with a rope pressure roller and hydraulic limit switch system for rope raising/lowering.

JW 3000					
					RFID
3,000 kg	1,700 mm	12 mm	50 m	30 m/min	✓

LATTICE BOOM WITH HOOK 600 KG

ATT-04-001

Lattice boom with type-approved swivel hook that extends the reach by an additional 4 metres. Ideal for lifting light and bulky loads even in hard-to-reach areas. Maximum capacity of 600 kg. Tubular structure to improve the size/capacity ratio.

J 600		
		RFID
600 kg	3,947 mm	✓

JIB WITH 2 T [1.2 M] HOOK

ATT-04-002

Double T-shaped jib with approved swivel hook allowing the reach to be increased by an additional 1.2 metres. Ideal for lifting bulky loads up to 2,000 kg, even in difficult areas.

JW 2000					
					RFID
2,000 kg	1,200 mm	-	-	-	✓

BOX-SHAPED BOOM WITH HOOK 2 T

ATT-04-013

Double-T box-shaped boom with type-approved swivel hook that extends the reach by an additional 2.8 metres. Ideal for lifting bulky loads of up to 2,000 kg even in hard-to-reach areas.

J 2000		
		RFID
2,000 kg	2,822 mm	✓

BOX-SHAPED BOOM WITH HOOK 4 T

ATT-04-024

Box-shaped boom with type-approved swivel hook that extends the reach by an additional 2 metres. Ideal for lifting bulky loads of up to 4,000 kg even in hard-to-reach areas.

J 4000		
		RFID
4,000 kg	2,000 mm	✓

BOX-SHAPED BOOM WITH TWO HOOKS 2 T - 7 T

ATT-04-027

Boom with 2 integral type-approved swivel hooks with a load capacity of 2,000/7,000 kg. The innermost hook has the larger load capacity, and allows the reach to be increased by an additional 2.8 metres.

J 2000 / 7000		
		RFID
2,000/7,000 kg	2,825 mm	✓

LATTICE BOOM WITH WINCH, SINGLE PULL 800 KG / DOUBLE PULL 1.5 T

ATT-04-007

Lattice boom with integral winch, adjustable to two different lengths and load capacities. Fully extended, extends the reach by an additional 7 metres with a single pull load capacity of 800 kg. When used in the retracted configuration, at a length of 3.3 metres, the double pull load capacity can lift loads of up to 1,500 kg. Tubular structure to improve the weight/capacity ratio. The winch is equipped with a rope pressure roller and hydraulic limit switch system for rope raising/lowering.

JW 800/1500					
					RFID
800/1,500 kg	7,111/3,300 mm	10 mm	44/24 m	48/24 m/min	✓

HYDRAULIC TELESCOPIC BOOM WITH HOOK 1.5 T / 2.5 T

ATT-04-021

Telescopic boom with box section adjustable to two different lengths and load capacities, equipped with a type-approved swivel hook. When fully extended, the reach is increased by a further 2.7 metres with a load capacity of 1,500 kg. When used fully retracted, the reach is 1.8 metres, with load capacity increased to 2,500 kg.

JT 2500			
			RFID
2,500 kg (retracted) - 1,500 kg (extended)	1,790 mm (retracted) - 2,690 mm (extended)	900 mm	✓

LATTICE BOOM WITH WINCH, SINGLE PULL 1.2 T / DOUBLE PULL 3 T

ATT-04-009

Lattice boom with integral winch, adjustable to two different lengths and load capacities. Fully extended, increases the reach by an additional 4.5 metres with a single pull load capacity of 1,200 kg. When used in the retracted configuration, at a length of 1.6 metres, the double pull load capacity can lift loads of up to 3,000 kg. Tubular structure to improve the weight/capacity ratio. The winch is equipped with a rope pressure roller and hydraulic limit switch system for rope raising/lowering.

JW 1200/3000					
					RFID
1,200/3,000 kg	4,500/1,607 mm	10 mm	48/25 m	48/24 m/min	✓

SWAN-NECK BOOM WITH HOOK 3 T

ATT-04-023

Swan-neck boom equipped with a type-approved swivel hook that extends the reach by an additional 1.5 metres. Ideal for handling loads of up to 3,000 kg even in confined spaces, attics and plant nurseries.

JCC 3000			
			RFID
3,000 kg	1,500 mm	1,077 mm	✓

BOX-SHAPED BOOM WITH HOOK 8 T

ATT-04-026

Box-shaped boom with type-approved swivel hook that extends the reach by an additional 3 metres. Ideal for lifting bulky loads of up to 8000 kg even in hard-to-reach areas.

J 8000		
		RFID
8,000 kg	3,235 mm	✓

BOOM WITH 3 HOOKS, 20 T - 15 T - 10 T

ATT-04-008

Boom with 3 integral type-approved swivel hooks with a load capacity of 10,000/15,000/20,000 kg. The innermost hook has the largest load capacity, and allows the reach to be increased by an additional 2 metres.

J 20 S-3		
		RFID
10,000 / 15,000 / 20,000 kg	2,230 mm	✓

COMPATIBILITY

	ATT-**04-001**	ATT-**04-002**	ATT-**04-005**	ATT-**04-007**	ATT-**04-008**	ATT-**04-009**
RTH 5.18	✓	✗	✓	✓	✗	✓
RTH 5.21	✓	✗	✓	✓	✗	✓
RTH 5.23	✓	✗	✓	✓	✗	✓
RTH 5.25	✓	✗	✓	✓	✗	✓
RTH 6.22 EC/TC	✓	✗	✓	✓	✗	✓
RTH 6.26 EC/TC	✓	✗	✓	✓	✗	✓
RTH 6.31 EC/TC	✓	✗	✓	✓	✗	✓
RTH 8.27/TC	✓	✗	✓	✓	✗	✓
RTH 8.35/TC	✓	✗	✓	✓	✗	✓
RTH 8.39/TC	✓	✗	✓	✓	✗	✓
RTH 8.46/TC	✓	✗	✓	✓	✗	✓
RTH 8.51	✓	✗	✓	✓	✗	✓
RTH 10.37	✓	✗	✓	✓	✗	✓
RTH 13.26	✓	✗	✓	✓	✗	✓
TH 3.6	✗	✓	✗	✗	✗	✗
TH 3,5.7	✗	✗	✗	✗	✗	✗
TH 3,5.9	✗	✗	✗	✗	✗	✗
TH 4.15 S/SP	✓	✗	✗	✗	✗	✗
TH 4.19 S/SP	✓	✗	✗	✗	✗	✗
TH 4,5.19 P	✓	✗	✗	✗	✗	✓
TH 5.8 P	✓	✗	✗	✗	✗	✓
TH 5,5.15/P	✓	✗	✗	✗	✗	✓
TH 5,5.19 P	✓	✗	✗	✗	✗	✓
TH 5,5.24 P	✓	✗	✗	✗	✗	✓
TH 6.20 P	✓	✗	✗	✗	✗	✓
TH 7.10 P	✓	✗	✗	✗	✗	✓
HTH 10.10	✓	✗	✗	✗	✗	✓
HTH 12.10	✓	✗	✗	✗	✗	✓
HTH 16.10	✗	✗	✗	✗	✓	✗
HTH 20.10	✗	✗	✗	✗	✓	✗
HTH 25.11	✗	✗	✗	✗	✓	✗
HTH 27.11	✗	✗	✗	✗	✓	✗
HTH 35.12	✗	✗	✗	✗	✓	✗

	ATT-**04-011**	ATT-**04-013**	ATT-**04-015**	ATT-**04-017**	ATT-**04-019**	ATT-**04-021**
RTH 5.18	✓	✓	✓	✓	✓	✓
RTH 5.21	✓	✓	✓	✓	✓	✓
RTH 5.23	✓	✓	✓	✓	✓	✓
RTH 5.25	✓	✓	✓	✓	✓	✓
RTH 6.22 EC/TC	✓	✓	✓	✓	✓	✓
RTH 6.26 EC/TC	✓	✓	✓	✓	✓	✓
RTH 6.31 EC/TC	✓	✓	✓	✓	✓	✓
RTH 8.27/TC	✓	✓	✓	✓	✓	✓
RTH 8.35/TC	✓	✓	✓	✓	✓	✓
RTH 8.39/TC	✓	✓	✓	✓	✓	✓
RTH 8.46/TC	✓	✓	✓	✓	✓	✓
RTH 8.51	✓	✓	✓	✓	✓	✓
RTH 10.37	✓	✓	✓	✓	✓	✓
RTH 13.26	✓	✓	✓	✓	✓	✓
TH 3.6	✗	✗	✗	✗	✗	✗
TH 3,5.7	✗	✓	✗	✗	✗	✗
TH 3,5.9	✗	✓	✗	✗	✗	✗
TH 4.15 S/SP	✗	✓	✗	✗	✗	✗
TH 4.19 S/SP	✗	✓	✗	✗	✗	✗
TH 4,5.19 P	✓	✓	✓	✓	✓	✓
TH 5.8 P	✓	✓	✓	✓	✓	✓
TH 5,5.15/P	✓	✓	✓	✓	✓	✓
TH 5,5.19 P	✓	✓	✓	✓	✓	✓
TH 5,5.24 P	✓	✓	✓	✓	✓	✓
TH 6.20 P	✓	✓	✓	✓	✓	✓
TH 7.10 P	✓	✓	✓	✓	✓	✓
HTH 10.10	✓	✓	✓	✓	✓	✓
HTH 12.10	✓	✓	✓	✓	✓	✓
HTH 16.10	✗	✗	✗	✗	✗	✗
HTH 20.10	✗	✗	✗	✗	✗	✗
HTH 25.11	✗	✗	✗	✗	✗	✗
HTH 27.11	✗	✗	✗	✗	✗	✗
HTH 35.12	✗	✗	✗	✗	✗	✗

✓: yes ✗: no

COMPATIBILITÀ

	ATT-**04-023**	ATT-**04-24**	ATT-**04-026**	ATT-**04-027**	ATT-**04-028**
RTH 5.18	✓	✓	✗	✓	✓
RTH 5.21	✓	✓	✗	✓	✓
RTH 5.23	✓	✓	✗	✓	✓
RTH 5.25	✓	✓	✗	✓	✓
RTH 6.22 EC/TC	✓	✓	✗	✓	✓
RTH 6.26 EC/TC	✓	✓	✗	✓	✓
RTH 6.31 EC/TC	✓	✓	✗	✓	✓
RTH 8.27/TC	✓	✓	✗	✓	✓
RTH 8.35/TC	✓	✓	✗	✓	✓
RTH 8.39/TC	✓	✓	✗	✓	✓
RTH 8.46/TC	✓	✓	✗	✓	✓
RTH 8.51	✓	✓	✗	✓	✓
RTH 10.37	✓	✓	✗	✓	✓
RTH 13.26	✓	✓	✗	✓	✓
TH 3.6	✗	✗	✗	✗	✗
TH 3,5.7	✓	✗	✗	✗	✗
TH 3,5.9	✓	✗	✗	✗	✗
TH 4.15 S/SP	✓	✓	✗	✗	✗
TH 4.19 S/SP	✓	✓	✗	✓	✗
TH 4,5.19 P	✓	✓	✗	✓	✓
TH 5.8 P	✓	✓	✗	✓	✓
TH 5,5.15/P	✓	✓	✗	✓	✓
TH 5,5.19 P	✓	✓	✗	✓	✓
TH 5,5.24 P	✓	✓	✗	✓	✓
TH 6.20 P	✓	✓	✗	✓	✓
TH 7.10 P	✓	✓	✗	✓	✓
HTH 10.10	✓	✓	✗	✗	✓
HTH 12.10	✓	✓	✗	✗	✓
HTH 16.10	✗	✗	✓	✗	✗
HTH 20.10	✗	✗	✓	✗	✗
HTH 25.11	✗	✗	✓	✗	✗
HTH 27.11	✗	✗	✓	✗	✗
HTH 35.12	✗	✗	✓	✗	✗

HOOKS

Simple and yet extremely versatile and durable, Magni type-approved hooks have a vast range of applications in construction. The range includes hooks of various load capacities in response to specific requirements, always with the best performance.

Check the compatibility and capacity of each attachment with your dealer.

HOOK 3 T

ATT-05-004

Type-approved 360° swivel hook with safety catch, designed for handling suspended loads. Load capacity up to 3,000 kg. Metal storage support included.

HS 3			
			RFID
3,000 kg	425 mm	✓	✓

HOOK 5 T

ATT-05-014

Type-approved 360° swivel hook with safety catch, designed for handling suspended loads. Load capacity up to 5,000 kg. Metal storage support included.

H 5			
			RFID
5,000 kg	500 mm	✓	✓

HOOK 6 T

ATT-05-001

Type-approved 360° swivel hook with safety catch, designed for handling suspended loads. Load capacity up to 6,000 kg. Metal storage support included.

H 6			
			RFID
6,000 kg	500 mm	✓	✓

HOOK 7 T

ATT-05-002

Type-approved 360° swivel hook with safety catch, designed for handling suspended loads. Load capacity up to 7,000 kg. Metal storage support included.

H 7			
			RFID
7,000 kg	370 mm	✓	✓

HOOK 8 T

ATT-05-003

Type-approved 360° swivel hook with safety catch, designed for handling suspended loads. Load capacity up to 8,000 kg. Metal storage support included.

H 8			
			RFID
8,000 kg	910 mm	✓	✓

HOOK 10 T

ATT-05-005

Type-approved 360° swivel hook with safety catch, designed for handling suspended loads. Load capacity up to 10,000 kg. Metal storage support included.

H 10			
			RFID
10,000 kg	370 mm	✓	✓

HOOK 13 T

ATT-05-013

Type-approved 360° swivel hook with safety catch. Its compact design and load capacity of up to 13,000 kg make it ideal for transporting the heaviest suspended loads.

H 13			
			RFID
13,000 kg	297 mm	✓	✓

HOOK 16 T

ATT-05-007

Type-approved 360° swivel hook with safety catch. Its compact design and load capacity of up to 16,000 kg make it ideal for transporting the heaviest suspended loads.

H 16S			
			RFID
16,000 kg	350 mm	✓	✓

HOOK 20 T

ATT-05-008

Type-approved 360° swivel hook with safety catch. Its compact design and load capacity of up to 20,000 kg make it ideal for transporting the heaviest suspended loads.

H 20S			
20,000 kg	350 mm	✓	✓

HOOK 30 T

ATT-05-009

Type-approved 360° swivel hook with safety catch. Its compact design and load capacity of up to 30,000 kg make it ideal for transporting the heaviest suspended loads.

H 30S			
30,000 kg	400 mm	+/- 30°	✓

HOOK 40 T (NARROW)

ATT-05-011

Type-approved 360° swivel hook with safety catch. Its compact design and load capacity of up to 40,000 kg make it ideal for transporting the heaviest suspended loads.

H 40S			
			RFID
40,000 kg	400 mm	+/- 30°	✓

HOOK 50 T

ATT-05-012

Type-approved 360° swivel hook with safety catch. Its compact design and load capacity of up to 50,000 kg make it ideal for transporting the heaviest suspended loads.

H 50			
			RFID
50,000 kg	760 mm	+/- 30°	✓

COMPATIBILITY

	ATT-**05-001**	ATT-**05-002**	ATT-**05-003**	ATT-**05-004**	ATT-**05-005**	ATT-**05-007**
RTH 5.18	✓	✗	✓	✗	✓	✗
RTH 5.21	✓	✗	✓	✗	✓	✗
RTH 5.23	✓	✗	✓	✗	✓	✗
RTH 5.25	✓	✗	✓	✗	✓	✗
RTH 6.22 EC/TC	✓	✗	✓	✗	✓	✗
RTH 6.26 EC/TC	✓	✗	✓	✗	✓	✗
RTH 6.31 EC/TC	✓	✗	✓	✗	✓	✗
RTH 8.27/TC	✓	✗	✓	✗	✓	✗
RTH 8.35/TC	✓	✗	✓	✗	✓	✗
RTH 8.39/TC	✓	✗	✓	✗	✓	✗
RTH 8.46/TC	✓	✗	✓	✗	✓	✗
RTH 8.51	✓	✗	✓	✗	✓	✗
RTH 10.37	✓	✗	✓	✗	✓	✗
RTH 13.26	✓	✗	✓	✗	✓	✗
TH 3.6	✗	✗	✗	✓	✗	✗
TH 3,5.7	✗	✗	✗	✗	✗	✗
TH 3,5.9	✗	✗	✗	✗	✗	✗
TH 4.15 S/SP	✗	✗	✗	✗	✗	✗
TH 4.19 S/SP	✗	✗	✗	✗	✗	✗
TH 4,5.19 P	✓	✓	✗	✗	✗	✗
TH 5.8 P	✓	✓	✗	✗	✗	✗
TH 5,5.15/P	✓	✓	✗	✗	✗	✗
TH 5,5.19 P	✓	✓	✗	✗	✗	✗
TH 5,5.24 P	✓	✓	✗	✗	✗	✗
TH 6.20 P	✓	✓	✗	✗	✗	✗
TH 7.10 P	✓	✓	✗	✗	✗	✗
HTH 10.10	✓	✗	✗	✗	✓	✗
HTH 12.10	✓	✗	✗	✗	✓	✗
HTH 16.10	✗	✗	✗	✗	✗	✓
HTH 20.10	✗	✗	✗	✗	✗	✓
HTH 25.11	✗	✗	✗	✗	✗	✓
HTH 27.11	✗	✗	✗	✗	✗	✓
HTH 35.12	✗	✗	✗	✗	✗	✓

	ATT-**05-008**	ATT-**05-009**	ATT-**05-011**	ATT-**05-012**	ATT-**05-013**	ATT-**05-014**
RTH 5.18	✗	✗	✗	✗	✓	✓
RTH 5.21	✗	✗	✗	✗	✓	✓
RTH 5.23	✗	✗	✗	✗	✓	✓
RTH 5.25	✗	✗	✗	✗	✓	✓
RTH 6.22 EC/TC	✗	✗	✗	✗	✓	✓
RTH 6.26 EC/TC	✗	✗	✗	✗	✓	✓
RTH 6.31 EC/TC	✗	✗	✗	✗	✓	✓
RTH 8.27/TC	✗	✗	✗	✗	✓	✓
RTH 8.35/TC	✗	✗	✗	✗	✓	✓
RTH 8.39/TC	✗	✗	✗	✗	✓	✓
RTH 8.46/TC	✗	✗	✗	✗	✓	✓
RTH 8.51	✗	✗	✗	✗	✓	✓
RTH 10.37	✗	✗	✗	✗	✓	✓
RTH 13.26	✗	✗	✗	✗	✓	✓
TH 3.6	✗	✗	✗	✗	✗	✗
TH 3,5.7	✗	✗	✗	✗	✗	✓
TH 3,5.9	✗	✗	✗	✗	✗	✓
TH 4.15 S/SP	✗	✗	✗	✗	✗	✓
TH 4.19 S/SP	✗	✗	✗	✗	✗	✓
TH 4,5.19 P	✗	✗	✗	✗	✗	✓
TH 5.8 P	✗	✗	✗	✗	✗	✓
TH 5,5.15/P	✗	✗	✗	✗	✗	✓
TH 5,5.19 P	✗	✗	✗	✗	✗	✓
TH 5,5.24 P	✗	✗	✗	✗	✗	✓
TH 6.20 P	✗	✗	✗	✗	✗	✓
TH 7.10 P	✗	✗	✗	✗	✗	✓
HTH 10.10	✗	✗	✗	✗	✓	✗
HTH 12.10	✗	✗	✗	✗	✓	✗
HTH 16.10	✓	✓	✓	✓	✗	✗
HTH 20.10	✓	✓	✓	✓	✗	✗
HTH 25.11	✓	✓	✓	✓	✗	✗
HTH 27.11	✓	✓	✓	✓	✗	✗
HTH 35.12	✓	✓	✓	✓	✗	✗

✓: yes ✗: no

HANDLERS

Designed specifically for mining and quarrying applications, as well as the logistics sector, our clamps offer unrivalled versatility and performance. The range has been specifically designed to handle even the toughest conditions.

Check the compatibility and capacity of each attachment with your dealer.

RIBS CLAMP 4 T

ATT-06-001

Clamp with a load capacity of 4,000 kg, made of high-strength material, for installing supporting arch ribs in tunnel construction applications. 65° rotation and 46° tilt for precise rib installation.

RC 4T			
			RFID
4,000 kg	46°	+/- 65° (manual)	✓

3D-FILM HANDLER 2.5 T

ATT-06-002

The 3D-Film handler is designed for the film industry, and features a surface designed to support equipment like LED panels or light diffusers during studio and location shoots. It has a load capacity of 2,500 kg and offers a full 360° of rotation.

3DF 2,5			
			RFID
2,500 kg	360°	360°	✓

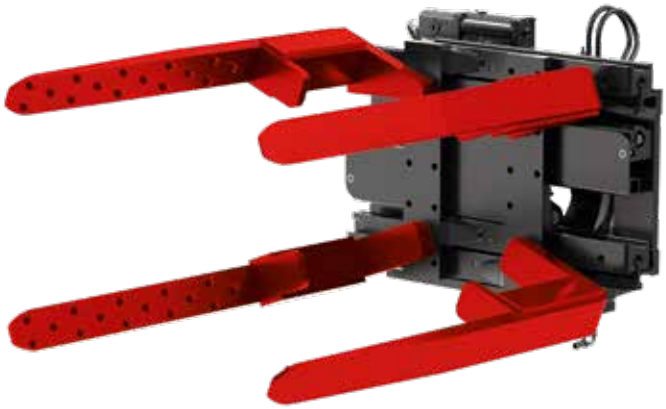

TYRE HANDLER 2.5 T - 25"

ATT-06-003

Tyre handler with a load capacity of 2,500 kg, ideal for handling tyres from 1,220 mm to 2,350 mm diameter. Hydraulic opening/closing, can be rotated through 360°. Non-slip forks assure that the tyre is held securely.
OPT-02-022 "Double hydraulic output at the boom head", required to use the clamp, must be ordered separately

CHECK FOR ANY PREARRANGEMENT REQUIREMENTS

TC 2,5.25

	MIN	MAX			RFID
2,500 kg	1,220 mm	2,350 mm	360°	✗	✓

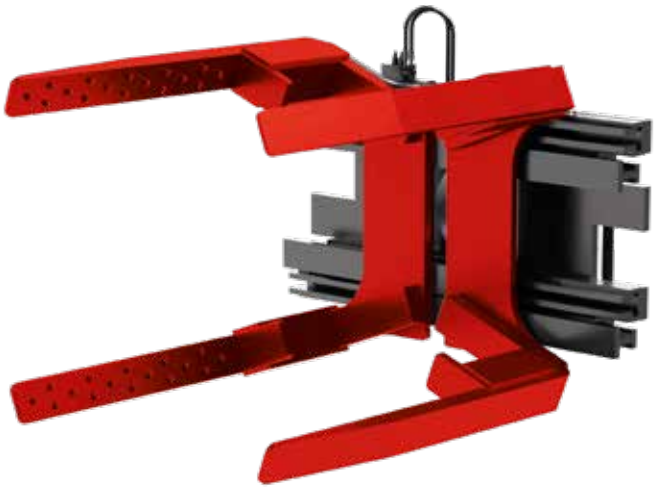

TYRE HANDLER 3.8 T - 49"

ATT-06-005

Tyre handler with a load capacity of 3,800 kg, ideal for handling tyres from 1,580 mm to 3,130 mm diameter. Hydraulic opening/closing, can be rotated through 360°. Non-slip forks assure that the tyre is held securely.
OPT-02-022 "Double hydraulic output at the boom head", required to use the clamp, must be ordered separately

CHECK FOR ANY PREARRANGEMENT REQUIREMENTS

TC 3,8.49

	MIN	MAX			RFID
3,800 kg	1,580 mm	3,130 mm	360°	✗	✓

PIPES HANDLER 1,000 KG

ATT-06-009

Clamp for handling pipes, load capacity up to 1,000 kg, pipe diameter from 242 mm up to 580 mm. The clamp has three degrees of freedom; 360° rotation, +/- 150 mm sideshift, and clamp opening/closing.

PC 1000

	MIN.	MAX.			RFID
1,000 kg	242 mm	580 mm	+/- 150 mm	360°	✓

PIPES HANDLER 4.5 T

ATT-06-013

This clamp is ideal for handling pipes of varying lengths and sections, with a load capacity of up to 4.5 tonnes, and is equipped with 1,400 mm forks. The hydraulically operated clamp ensures a secure and adjustable grip, enabling the handling of pipes with diameters ranging from 150 mm to 930 mm.

FC 4,5 T PIPES

	MIN	MAX			RFID
4,500 kg	150 mm	930 mm	-	-	✓

PIPES HANDLER 16.6 T

ATT-06-014

Pinza tubi ideale per la movimentazione di tubi di diverse lunghezze e sezioni, con una capacità di carico fino a 16,6 tonnellate e dotato di forche da 2400 mm. La pin This clamp is ideal for handling pipes of varying lengths and sections, with a load capacity of up to 16.6 tonnes, and is equipped with 2,400 mm forks. The hydraulically operated clamp ensures a secure and adjustable grip, enabling the handling of pipes with diameters ranging from 610 mm to 2,440 mm. za ad azionamento idraulico garantisce una presa sicura e regolabile, consentendo la movimentazione di tubi con diametri compresi tra 610 mm e 2440 mm.

FCG 16,6 T 2,4					
	MIN	MAX			RFID
16,600 kg	610 mm	2,240 mm	-	-	✓

CYLINDER HANDLER 4.5 T

ATT-06-011

Clamp with a load capacity of 4,500 kg, ideal for handling various types of cylinder of diameters from 250 mm up to 450 mm. Four different movements: clamp opening/closing, +/- 300 mm sideshift, 360° rotation and +/- 27° lateral rotation of the cylinder.

CC 4.5							
			MAX.				RFID
4,500 kg	4,420 - 2,290 mm	4,240 mm (max.) 2,740 mm (min)	450 mm	+/- 300 mm	360°	+/- 27°	✓

TYRE HANDLER 8 T - 63"

ATT-06-006

Tyre handler with a load capacity of 8,000 kg, ideal for handling tyres from 1,200 mm to 4,000 mm diameter. Hydraulic opening/closing, the pads can be rotated through 360°. The unit also has +/- 300 mm sideshift and 344° rotation in both directions. The clamp is also equipped with extensions which stop the tyre sliding inwards once it is clamped.

TC 08.63						
	MIN	MAX				RFID
8,000 kg	1,180 mm	4,000 mm	344°	360°	+/- 300 mm	✓

TYRE HANDLER 16 T - 63"

ATT-06-007

Tyre handler with a load capacity of 16,000 kg, ideal for handling tyres from 1,200 mm to 4,250 mm diameter. Hydraulic opening/closing, the pads can be rotated through 360°. The unit also has +/- 300 mm sideshift and 344° rotation in both directions. The clamp is also equipped with hydraulic extensions which stop the tyre sliding inwards once it is clamped.

TC 16.63 CP						
	MIN	MAX				RFID
16,000 kg	1,170 mm	4,250 mm	344°	360°	+/- 300 mm	✓

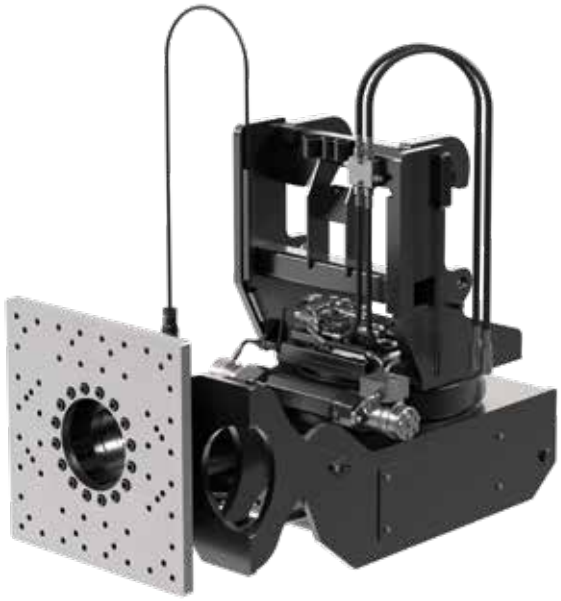

4D-FILM HANDLER, 2,000 KG

ATT-06-008

4D-Film handler designed for the film industry, featuring a surface for mounting equipment like LED light panels or flood lights during studio and location shoots. Rated for loads up to 2,000 kg, it offers 360° vertical rotation, 180° horizontal rotation and a new >100° tilt function.

PC 1000	
	RFID
2,000 kg	✓

CYLINDER HANDLER 11 T

ATT-06-010

Clamp for servicing, replacing and handling large excavator cylinders weighing up to 11,000 kg, with a diameter up to 620 mm. This attachment requires the MTM, which must be ordered separately. (ATT-08-004).

CHECK FOR ANY PREARRANGEMENT REQUIREMENTS

CC						
			MAX.			RFID
11,000 kg	2,960 - 960 mm	5,800 mm (max.) 2,760 mm (min)	620 mm	+/- 300 mm	360°	✓

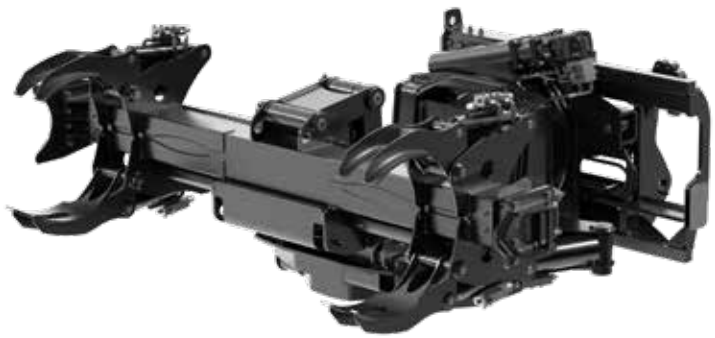

CYLINDER HANDLER 4.5 T

ATT-06-012

Clamp with a load capacity of 4,500 kg, ideal for handling various types of cylinder of diameters from 250 mm up to 450 mm. Four different movements: clamp opening/closing, +/- 300 mm sideshift, 360° rotation and +/- 27° lateral rotation of the cylinder.

CC 4.5

			MAX.				RFID
4,500 kg	4,420 - 2,290 mm	4,240 mm (max.) 2,740 mm (min)	450 mm	+/- 300 mm	360°	+/- 27°	✓

TYRE HANDLER 3.5 T - 55"

ATT-06-004

Tyre handler with a load capacity of 3,500 kg, ideal for handling tyres from 1,120 mm to 3,500 mm diameter. Hydraulic opening/closing, the pads can be rotated through +/-61°. The unit also has +/-24° rotation in both directions. The clamp is also equipped with extensions which stop the tyre sliding inwards once it is clamped.

TC 3,5

	MIN	MAX			RFID
3,500 kg	1,120 mm	3,500 mm	+/- 24°	+/- 61°	✓

COMPATIBILITY

	ATT-**06-001**	ATT-**06-002**	ATT-**06-003**	ATT-**06-004**	ATT-**06-005**	ATT-**06-006**	ATT-**06-007**
RTH 5.18	✓	✓	✓	✗	✓	✗	✗
RTH 5.21	✓	✓	✓	✗	✓	✗	✗
RTH 5.23	✓	✓	✓	✗	✓	✗	✗
RTH 5.25	✓	✓	✓	✗	✓	✗	✗
RTH 6.22 EC/TC	✓	✓	✓	✗	✓	✗	✗
RTH 6.26 EC/TC	✓	✓	✓	✗	✓	✗	✗
RTH 6.31 EC/TC	✓	✓	✓	✗	✓	✗	✗
RTH 8.27/TC	✓	✓	✓	✗	✓	✗	✗
RTH 8.35/TC	✓	✓	✓	✗	✓	✗	✗
RTH 8.39/TC	✓	✓	✓	✗	✓	✗	✗
RTH 8.46/TC	✓	✓	✓	✗	✓	✗	✗
RTH 8.51	✓	✓	✓	✗	✓	✗	✗
RTH 10.37	✓	✓	✓	✗	✓	✗	✗
RTH 13.26	✓	✓	✓	✗	✓	✗	✗
TH 3.6	✗	✗	✗	✗	✗	✗	✗
TH 3,5.7	✗	✗	✗	✗	✗	✗	✗
TH 3,5.9	✗	✗	✗	✗	✗	✗	✗
TH 4.15 S/SP	✗	✗	✗	✗	✗	✗	✗
TH 4.19 S/SP	✗	✗	✗	✗	✗	✗	✗
TH 4,5.19 P	✓	✓	✓	✗	✓	✗	✗
TH 5.8 P	✓	✓	✓	✗	✓	✗	✗
TH 5,5.15/P	✓	✓	✓	✗	✓	✗	✗
TH 5,5.19 P	✓	✓	✓	✗	✓	✗	✗
TH 5,5.24 P	✓	✓	✓	✗	✓	✗	✗
TH 6.20 P	✓	✓	✓	✗	✓	✗	✗
TH 7.10 P	✓	✓	✓	✗	✓	✗	✗
HTH 10.10	✗	✓	✓	✓	✓	✗	✗
HTH 12.10	✗	✓	✓	✓	✓	✗	✗
HTH 16.10	✗	✗	✗	✗	✗	✓	✓
HTH 20.10	✗	✗	✗	✗	✗	✓	✓
HTH 25.11	✗	✗	✗	✗	✗	✓	✓
HTH 27.11	✗	✗	✗	✗	✗	✓	✓
HTH 35.12	✗	✗	✗	✗	✗	✓	✓

	ATT-**06-008**	ATT-**06-009**	ATT-**06-010**	ATT-**06-011**	ATT-**06-012**	ATT-**06-013**	ATT-**06-014**
RTH 5.18	✓	✓	✗	✓	✗	✓	✗
RTH 5.21	✓	✓	✗	✓	✗	✓	✗
RTH 5.23	✓	✓	✗	✓	✗	✓	✗
RTH 5.25	✓	✓	✗	✓	✗	✓	✗
RTH 6.22 EC/TC	✓	✓	✗	✓	✗	✓	✗
RTH 6.26 EC/TC	✓	✓	✗	✓	✗	✓	✗
RTH 6.31 EC/TC	✓	✓	✗	✓	✗	✓	✗
RTH 8.27/TC	✓	✓	✗	✓	✗	✓	✗
RTH 8.35/TC	✓	✓	✗	✓	✗	✓	✗
RTH 8.39/TC	✓	✓	✗	✓	✗	✓	✗
RTH 8.46/TC	✓	✓	✗	✓	✗	✓	✗
RTH 8.51	✓	✓	✗	✓	✗	✓	✗
RTH 10.37	✓	✓	✗	✓	✗	✓	✗
RTH 13.26	✓	✓	✗	✓	✗	✓	✗
TH 3.6	✗	✗	✗	✗	✗	✗	✗
TH 3,5.7	✗	✗	✗	✗	✗	✗	✗
TH 3,5.9	✗	✗	✗	✗	✗	✗	✗
TH 4.15 S/SP	✗	✗	✗	✗	✗	✗	✗
TH 4.19 S/SP	✗	✗	✗	✗	✗	✗	✗
TH 4,5.19 P	✓	✓	✗	✗	✗	✓	✗
TH 5.8 P	✓	✓	✗	✗	✗	✓	✗
TH 5,5.15/P	✓	✓	✗	✗	✗	✓	✗
TH 5,5.19 P	✓	✓	✗	✗	✗	✓	✗
TH 5,5.24 P	✓	✓	✗	✗	✗	✓	✗
TH 6.20 P	✓	✓	✗	✗	✗	✓	✗
TH 7.10 P	✓	✓	✗	✗	✗	✓	✗
HTH 10.10	✓	✓	✗	✓	✗	✓	✗
HTH 12.10	✓	✓	✗	✓	✗	✓	✗
HTH 16.10	✗	✗	✓	✗	✓	✗	✓
HTH 20.10	✗	✗	✓	✗	✓	✗	✓
HTH 25.11	✗	✗	✓	✗	✓	✗	✓
HTH 27.11	✗	✗	✓	✗	✓	✗	✓
HTH 35.12	✗	✗	✓	✗	✓	✗	✓

✓: yes ✗: no

BUCKETS

Developed for the construction and maintenance sectors, our buckets are available in a range of lifting capacities, and are known as reliable partners in any industrial application. Like all our attachments, they offer Magni's guaranteed performance and quality.

Check the compatibility and capacity of each attachment with your dealer.

GRAPPLE BUCKET (WITH WELDED TINES) – STRUCK CAPACITY 900 L

ATT-07-001

Grapple bucket ideal for agricultural applications and the handling of loose materials. It offers a struck capacity of 900 l and a load capacity of 1,000 kg, ensuring high performance during loading operations. Equipped with a hydraulically operated grapple featuring 5 welded tines designed to ensure excellent material retention and minimise spillage during use.

AB 900 2,03 G			
			RFID
1,000 l	900 l	2,000 mm	X

BUCKET WITH BOLT-ON CUTTING EDGE 1,000 L

ATT-07-015

Lightweight bucket with a capacity of 1,000 l. Equipped with a bolt-on, reversible cutting edge for extended service life and easy replacement. Suitable for handling aggregates such as sand, gravel, expanded clay and generally any granular material.

CB 1000 DL			
			RFID
1,000 l	825 l	2,460 mm	✓

BUCKET WITH BOLT-ON CUTTING EDGE 1,500 L

ATT-07-016

Lightweight bucket with a capacity of 1,500 l. Equipped with a bolt-on, reversible cutting edge for extended service life and easy replacement. Suitable for handling aggregates such as sand, gravel, expanded clay and generally any granular material.

CB 1500 DL			
			RFID
1,500 l	1,185 l	2,450 mm	✓

BUCKET WITH BOLT-ON CUTTING EDGE 2,000 L

ATT-07-018

Lightweight bucket with a capacity of 2,000 l. Equipped with a bolt-on, reversible cutting edge for extended service life and easy replacement. Suitable for handling aggregates such as sand, gravel, expanded clay and generally any granular material.

CB 2000 DL			
			RFID
2,000 l	1,629 l	2,450 mm	✓

REINFORCED BUCKET WITH BOLT-ON CUTTING EDGE 1,500 L

ATT-07-010

Robust bucket with a capacity of 1,500 l.
Equipped with a bolt-on, reversible cutting edge for extended service life and easy replacement.
Suitable for handling aggregates such as sand, gravel, expanded clay and generally any granular material.

CB 1500			
			RFID
1,500 l	1,185 l	2,450 mm	✓

REINFORCED BUCKET WITH BOLT-ON CUTTING EDGE, 2,000 L

ATT-07-011

Robust bucket with a capacity of 2,000 l. Equipped with a bolt-on, reversible cutting edge for extended service life and easy replacement.
Suitable for handling aggregates such as sand, gravel, expanded clay and generally any granular material.

CB 2000			
			RFID
2,112 l	1,677 l	2,460 mm	✓

REINFORCED BUCKET WITH BOLT-ON CUTTING EDGE, 2,500 L

ATT-07-012

Robust bucket with a capacity of 2,500 l. Equipped with a bolt-on, reversible cutting edge for extended service life and easy replacement.
Suitable for handling aggregates such as sand, gravel, expanded clay and generally any granular material.

CB 2500			
			RFID
2,530 l	CB 2.010 l	2,450 mm	✓

BUCKET WITH WELDED CUTTING EDGE 800 L

ATT-07-005

Lightweight bucket with a capacity of 800 l. Equipped with a welded cutting edge, it is suitable for handling aggregates such as sand, gravel, expanded clay and generally any granular material.

CBS 800 SL			
			RFID
800 l	645 l	1,870 mm	✓

BUCKET WITH WELDED CUTTING EDGE 800 L [WIDTH 2,100 MM]

ATT-07-002

Lightweight bucket with a capacity of 800 l. Equipped with welded cutting edge. Suitable for handling aggregates such as sand, gravel, expanded clay and generally any granular material.

CB 1500		
800 l	645 l	2,100 mm

BUCKET WITH WELDED CUTTING EDGE 1,000 L [WIDTH 2,100 MM]

ATT-07-021

Lightweight bucket with a capacity of 1,000 l. Equipped with welded cutting edge. Suitable for handling aggregates such as sand, gravel, expanded clay and generally any granular material.

CB 1500		
800 l	815 l	2,100 mm

BUCKET WITH WELDED CUTTING EDGE 1,000 L

ATT-07-013

Lightweight bucket with a capacity of 1,000 l. Equipped with welded cutting edge. Suitable for handling aggregates such as sand, gravel, expanded clay and generally any granular material.

CB 1000 SL			
			RFID
1,000 l	825 l	2,450 mm	✓

BUCKET WITH WELDED CUTTING EDGE 1,500 L

ATT-07-014

Lightweight bucket with a capacity of 1,500 l. Equipped with welded cutting edge. Suitable for handling aggregates such as sand, gravel, expanded clay and generally any granular material.

CB 1500 SL			
			RFID
1,500 l	1,185 l	2,450 mm	✓

BUCKET WITH WELDED CUTTING EDGE 2,000 L

ATT-07-017

Lightweight bucket with a capacity of 2,000 l. Equipped with welded cutting edge. Suitable for handling aggregates such as sand, gravel, expanded clay and generally any granular material.

CB 2000 SL			
			RFID
2,000 l	1,629 l	2,450 mm	✓

REINFORCED BUCKET WITH WELDED CUTTING EDGE 1,000 L

ATT-07-019

Robust bucket with a capacity of 1,000 l. Equipped with a welded cutting edge, it is suitable for handling aggregates such as sand, gravel, expanded clay and generally any granular material.

CB 1000			
			RFID
1,000 l	825 l	2,450 mm	✓

REINFORCED BUCKET WITH WELDED CUTTING EDGE 1,500 L

ATT-07-020

Robust bucket with a capacity of 1,500 l. Equipped with a welded cutting edge, it is suitable for handling aggregates such as sand, gravel, expanded clay and generally any granular material.

CB 1500			
			RFID
1,500 l	1,191 l	2,450 mm	✓

AGGREGATE CONTAINER 2,000 L

ATT-07-007

Aggregates bucket with 2,000 l capacity. Ideal for loading bulk materials onto trucks.

BIM 2000			
			RFID
2,050 l	1,500 l	2,410 mm	✓

1,000 L BUCKET WITH RETAINER

ATT-07-008

Bucket with retainer ideal for handling bulk materials. It offers a capacity of 1,000 l, ensuring high performance during loading operations. It is equipped with a hydraulically operated retainer, with 14 welded teeth designed to ensure excellent material retention and minimise losses during use.

CB 1000 TR			
			RFID
1,000 l	-	2,500 mm	✓

BUCKET 850 L (4X1)

ATT-07-009

This bucket is used for levelling and unloading jobs: when the clamp is closed and the bucket tilted forwards, it digs into the ground and fills with material for loading directly into the dump truck. Can also be used to pick up materials or objects or as a bulldozer, with the clamp chassis completely open, using the bucket frame to push material forwards one layer at a time.

4X1 850L			
			RFID
850 l	670 l	2,400 mm	✓

5,900 L BUCKET (4X1)

ATT-07-006

Versatile four-in-one bucket for various site uses. It is ideal for picking up material with density ≤ 2.1 kg/m3. Toothed sides to ensure a safe grip for cylindrical objects. Rear blade for terrain levelling and recovery.

4X1 5900			
			RFID
5,882 l	-	2,500 mm	✓

COMPATIBILITY

	ATT-**07-001**	ATT-**07-002**	ATT-**07-005**	ATT-**07-006**	ATT-**07-007**	ATT-**07-008**	ATT-**07-009**
RTH 5.18	✗	✗	✗	✗	✓	✓	✓
RTH 5.21	✗	✗	✗	✗	✓	✓	✓
RTH 5.23	✗	✗	✗	✗	✓	✓	✓
RTH 5.25	✗	✗	✗	✗	✓	✓	✓
RTH 6.22 EC/TC	✗	✗	✗	✗	✓	✓	✓
RTH 6.26 EC/TC	✗	✗	✗	✗	✓	✓	✓
RTH 6.31 EC/TC	✗	✗	✗	✗	✓	✓	✓
RTH 8.27/TC	✗	✗	✗	✗	✓	✓	✓
RTH 8.35/TC	✗	✗	✗	✗	✓	✓	✓
RTH 8.39/TC	✗	✗	✗	✗	✓	✓	✓
RTH 8.46/TC	✗	✗	✗	✗	✓	✓	✓
RTH 8.51	✗	✗	✗	✗	✓	✓	✓
RTH 10.37	✗	✗	✗	✗	✓	✓	✓
RTH 13.26	✗	✗	✗	✗	✓	✓	✓
TH 3.6	✓	✗	✓	✗	✗	✗	✗
TH 3,5.7	✗	✓	✗	✗	✗	✗	✗
TH 3,5.9	✗	✓	✗	✗	✗	✗	✗
TH 4.15 S/SP	✗	✗	✗	✗	✗	✗	✗
TH 4.19 S/SP	✗	✗	✗	✗	✗	✗	✗
TH 4,5.19 P	✗	✗	✗	✗	✗	✓	✓
TH 5.8 P	✗	✗	✗	✗	✗	✓	✗
TH 5,5.15/P	✗	✗	✗	✗	✗	✓	✓
TH 5,5.19 P	✗	✗	✗	✗	✗	✓	✓
TH 5,5.24 P	✗	✗	✗	✗	✗	✓	✓
TH 6.20 P	✗	✗	✗	✗	✗	✓	✓
TH 7.10 P	✗	✗	✗	✗	✗	✓	✓
HTH 10.10	✗	✗	✗	✗	✓	✗	✓
HTH 12.10	✗	✗	✗	✗	✓	✗	✓
HTH 16.10	✗	✗	✗	✓	✗	✗	✗
HTH 20.10	✗	✗	✗	✓	✗	✗	✗
HTH 25.11	✗	✗	✗	✓	✗	✗	✗
HTH 27.11	✗	✗	✗	✓	✗	✗	✗
HTH 35.12	✗	✗	✗	✓	✗	✗	✗

	ATT-**07-010**	ATT-**07-011**	ATT-**07-012**	ATT-**07-013**	ATT-**07-014**	ATT-**07-015**	ATT-**07-016**
RTH 5.18	✗	✗	✗	✗	✗	✗	✗
RTH 5.21	✗	✗	✗	✗	✗	✗	✗
RTH 5.23	✗	✗	✗	✗	✗	✗	✗
RTH 5.25	✗	✗	✗	✗	✗	✗	✗
RTH 6.22 EC/TC	✗	✗	✗	✗	✗	✗	✗
RTH 6.26 EC/TC	✗	✗	✗	✗	✗	✗	✗
RTH 6.31 EC/TC	✗	✗	✗	✗	✗	✗	✗
RTH 8.27/TC	✗	✗	✗	✗	✗	✗	✗
RTH 8.35/TC	✗	✗	✗	✗	✗	✗	✗
RTH 8.39/TC	✗	✗	✗	✗	✗	✗	✗
RTH 8.46/TC	✗	✗	✗	✗	✗	✗	✗
RTH 8.51	✗	✗	✗	✗	✗	✗	✗
RTH 10.37	✗	✗	✗	✗	✗	✗	✗
RTH 13.26	✗	✗	✗	✗	✗	✗	✗
TH 3.6	✗	✗	✗	✗	✗	✗	✗
TH 3,5.7	✗	✗	✗	✗	✗	✗	✗
TH 3,5.9	✗	✗	✗	✗	✗	✗	✗
TH 4.15 S/SP	✓	✓	✓	✓	✓	✓	✓
TH 4.19 S/SP	✓	✓	✓	✓	✓	✓	✓
TH 4,5.19 P	✓	✓	✓	✓	✓	✓	✓
TH 5.8 P	✗	✗	✗	✗	✗	✓	✗
TH 5,5.15/P	✓	✓	✓	✓	✓	✓	✓
TH 5,5.19 P	✓	✓	✓	✓	✓	✓	✓
TH 5,5.24 P	✓	✓	✓	✓	✓	✓	✓
TH 6.20 P	✓	✓	✓	✓	✓	✓	✓
TH 7.10 P	✓	✓	✓	✓	✓	✓	✓
HTH 10.10	✗	✗	✓	✗	✗	✗	✗
HTH 12.10	✗	✗	✓	✗	✗	✗	✗
HTH 16.10	✗	✗	✗	✗	✗	✗	✗
HTH 20.10	✗	✗	✗	✗	✗	✗	✗
HTH 25.11	✗	✗	✗	✗	✗	✗	✗
HTH 27.11	✗	✗	✗	✗	✗	✗	✗
HTH 35.12	✗	✗	✗	✗	✗	✗	✗

✓: yes ✗: no

COMPATIBILITY

	ATT-**07-017**	ATT-**07-018**	ATT-**07-019**	ATT-**07-020**	ATT-**07-021**
RTH 5.18	✗	✗	✓	✓	✗
RTH 5.21	✗	✗	✓	✓	✗
RTH 5.23	✗	✗	✓	✓	✗
RTH 5.25	✗	✗	✓	✓	✗
RTH 6.22 EC/TC	✗	✗	✓	✓	✗
RTH 6.26 EC/TC	✗	✗	✓	✓	✗
RTH 6.31 EC/TC	✗	✗	✓	✓	✗
RTH 8.27/TC	✗	✗	✓	✓	✗
RTH 8.35/TC	✗	✗	✓	✓	✗
RTH 8.39/TC	✗	✗	✓	✓	✗
RTH 8.46/TC	✗	✗	✓	✓	✗
RTH 8.51	✗	✗	✓	✓	✗
RTH 10.37	✗	✗	✓	✓	✗
RTH 13.26	✗	✗	✓	✓	✗
TH 3.6	✗	✗	✗	✗	✗
TH 3,5.7	✗	✗	✗	✗	✓
TH 3,5.9	✗	✗	✗	✗	✓
TH 4.15 S/SP	✓	✓	✗	✗	✗
TH 4.19 S/SP	✓	✓	✗	✗	✗
TH 4,5.19 P	✓	✓	✗	✗	✗
TH 5.8 P	✗	✗	✗	✗	✗
TH 5,5.15/P	✓	✓	✗	✗	✗
TH 5,5.19 P	✓	✓	✗	✗	✗
TH 5,5.24 P	✓	✓	✗	✗	✗
TH 6.20 P	✓	✓	✗	✗	✗
TH 7.10 P	✓	✓	✗	✗	✗
HTH 10.10	✗	✗	✓	✓	✗
HTH 12.10	✗	✗	✓	✓	✗
HTH 16.10	✗	✗	✗	✗	✗
HTH 20.10	✗	✗	✗	✗	✗
HTH 25.11	✗	✗	✗	✗	✗
HTH 27.11	✗	✗	✗	✗	✗
HTH 35.12	✗	✗	✗	✗	✗

SPECIAL EQUIPMENT

This category covers our attachment range for specialised applications. From removing large trees to cleaning roads with snow ploughs or installing glass panels high up on tall buildings - Magni always has the best solution for specialised requirements.

Check the compatibility and capacity of each attachment with your dealer.

TREE CUTTER BOOM WITH CLAMP 1.5 T

ATT-08-005

Tree cutter boom with clamp designed for felling and handling tree branches. The unit offers fast, efficient and safe operation for tree maintenance and branch removal. The combination of boom, tilting clamp and chainsaw enables smaller sections of the tree to be removed from any direction, facilitating immediate clearing. On suitably equipped machines, thanks to the availability of kit solutions, it is a plug-and-play solution. OPT-05-001 pre-arrangement kit and OPT-05-005 boom protection kit for tree cutters and dusty environments required

CHECK FOR ANY PREARRANGEMENT REQUIREMENTS

JGS-GMT050 TTC			
1,500 kg	2,350 mm	1,220 mm	✓

TREE CUTTER

ATT-08-001

Clamp with chainsaw for felling and removing trees which are dangerous or in challenging locations, like urban and residential areas, along roadsides and railway lines. On suitably equipped machines, thanks to the availability of pre-arrangement and boom protection kits, it is a plug-and-play solution. The attachment features a saw unit with spring suspension which prevents the blade flexing when force is applied. Thanks to the Power Tiltator, the clamp can rotate through 360°, thus enabling a secure grip on the branch or tree even in the most challenging positions. OPT-05-001 e OPT-05-005 pre-arrangement kit required.

CHECK FOR ANY PREARRANGEMENT REQUIREMENTS

-		
1,280 mm	360°	✓

CONCRETE BUCKET 600 L

ATT-08-010

Concrete bucket with 600 l capacity and hydraulically operated outlet

BB 600					
					RFID
600 l	1,420 mm	2,020 mm	1,180 mm	1,130 mm	✗

MIXER BUCKET 700 L

ATT-08-014

Mixer bucket with a capacity of 700 l, complete with HB400 wear-resistant steel bottom and mixer blades, fixed curved protection grille with bag breaker, solenoid valve, hydraulic lines, electric control kit, hydraulically operated outlet and outlet pipe. OPT-02-022 required.

CHECK FOR ANY PREARRANGEMENT REQUIREMENTS

MB 700 SL					
CLASS	WIDTH	CAPACITY	TRANSMISSION	UNLADEN WEIGHT	RFID
3	2,090 mm	700 l	chain	765 kg	✓

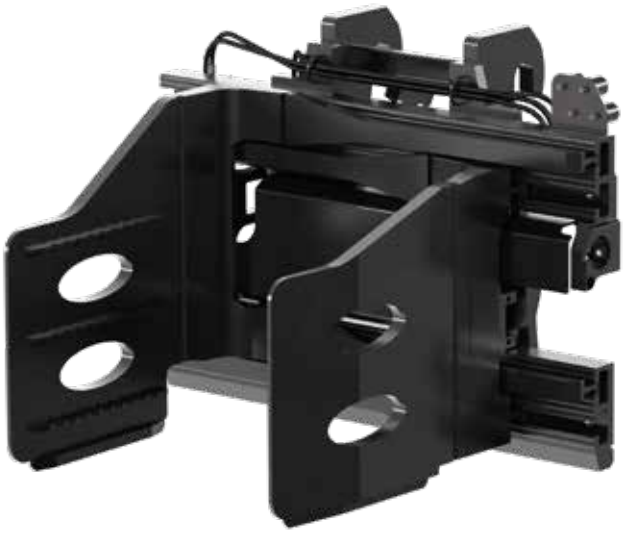

PAPER CLAMP 3.2 T

ATT-08-018

Clamp designed for recycling, heavy-duty logistics and paper/cellulose supply chain applications. Designed to assure an unobstructed view of the chassis from any angle. The optimised boom profile provides outstanding performance without compromising the strength of the assembly. The chassis is steel, the boom bars in extruded steel alloy, and the boom bases are in cast iron, for excellent durability and reliability. Built-in hydraulic flow diverters and a two-way pressure regulator valve assure fast, synchronised operation of the booms.

-

LOAD CAPACITY AT CENTRE OF GRAVITY	CHASSIS WIDTH	CHASSIS HEIGHT	INTERNAL/INTERNAL OPENING	CLAMP JAWS	JAW THICKNESS	MINIMUM CLAMP JAW OPENING	HYDRAULIC FUNCTIONS
3,200 kg @500 mm	1,250 mm	751 mm	700 - 2,300 mm	550 x 750 mm	Fixed 78 mm	811 mm	2

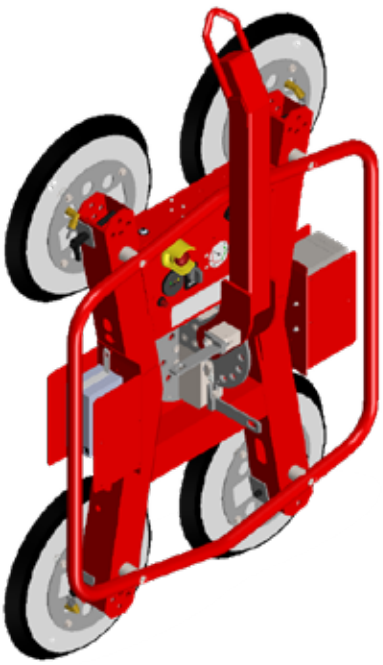

ET-HOVER-UNIVAC VACUUM LIFTING ATTACHMENT

ATT-08-007

The eT-Hover-univac vacuum lifting attachment is designed to safely handle glass, ceramic and metal panels. It can lift loads of up to 700 kg in the horizontal and vertical orientations. Thanks to its modular structure, the lifting device can be adjusted to fit the size of the part. Four additional suction cups are included for handling even larger panels, up to the maximum load of 700 kg. But even in its basic configuration with 4 suction cups, it can lift up to 360 kg in the vertical orientation and 500 kg in the horizontal orientation. The attachment comes with handy compact remote control for the vacuum function. Winch for attachment handling required (not included).

CHECK FOR ANY PREARRANGEMENT REQUIREMENTS

ET-HOVER-UNIVAC

MAXIMUM LOAD CAPACITY	HORIZONTAL LOAD CAPACITY	VERTICAL LOAD CAPACITY	NO. SUCTION CUPS	VACUUM SYSTEM	RFID
700 kg (with 8 suction cups)	500 kg	360 kg	4+4 (BLSP 400 RL)	Diaphragm pump; 2.1 m^3/h, 12 V DC	X

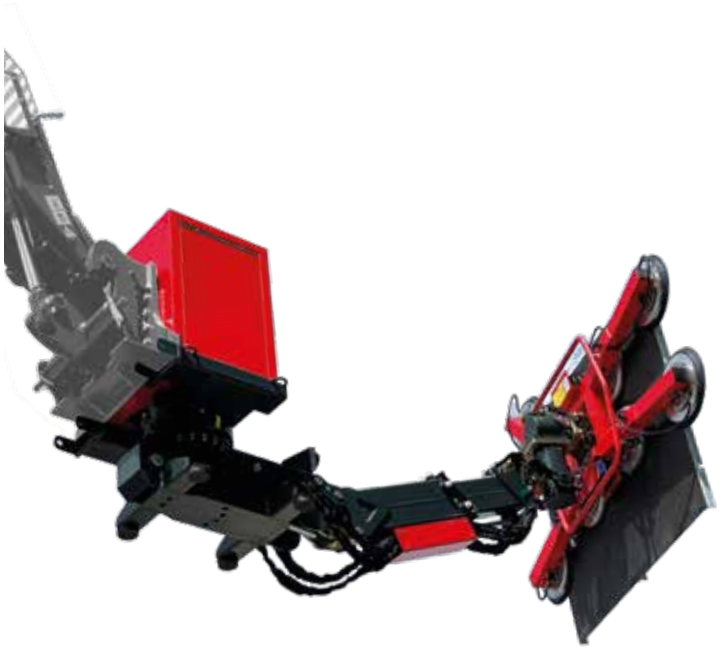

ET-LITOCRAN700 TELESCOPIC VACUUM HANDLER

ATT-08-021

The attachment combines a 3D head with a telescopic boom which extends up to 3.2 m from the fixed or rotating telescopic handler's boom head. The tip of the attachment's boom is equipped with the vacuum head. A remote control enables the unit to be controlled precisely in any direction. Ideal for the safe handling of glass, ceramic and metal panels. It can lift loads of up to 700 kg in the horizontal and vertical orientations. The panels can be tilted 90° and rotated through 360° by hand. The four additional suction cups included in the kit enable larger panels to be handled by adapting the handler to the size of the panel, up to the maximum load of 700 kg. But even in its basic configuration with 4 suction cups, it can lift up to 360 kg in the vertical orientation and 500 kg in the horizontal orientation. The attachment charges in about 4 hours, and a full charge provides 8 hours of operation. A handy compact remote control for the vacuum function is included.

CHECK FOR ANY PREARRANGEMENT REQUIREMENTS

ET-LITOCRAN700

MAXIMUM LOAD CAPACITY	HORIZONTAL LOAD CAPACITY	VERTICAL LOAD CAPACITY	ROTATION	NO. SUCTION CUPS	VACUUM SYSTEM	POWER SUPPLY	BATTERY LIFE	CHARGING TIME	RFID
700 kg (with 8 suction cups)	500 kg	360 kg	360° continuous, by hand	4+4 (BLSP 400 RL)	Diaphragm pump; 2.1 m^3/h, 12 V DC	12 V / 4 A	8 hours	3 – 4 hours	✓

SUSPENSION CYLINDER TOOL

ATT-08-002

The attachment is specially designed for safely removing dump truck suspensions and front gearboxes. ATT-08-004 required.

CHECK FOR ANY PREARRANGEMENT REQUIREMENTS

SCT

					SIDESHIFT		RFID
Hub + Suspension: 9,000 kg Suspension only: 7,000 kg	2,962 mm	60°	360°	360°	+/- 300 mm	Without adapter: 370 - 530 mm With adapter: 250 - 400 mm	✓

WHEEL HUB TOOL

ATT-08-003

Attachment for safely removing dump truck wheel hubs. It can also be used for other quarry and construction vehicles.
ATT-08-004 required.

CHECK FOR ANY PREARRANGEMENT REQUIREMENTS

RWTH

			RFID
22,000 kg	842 - 1,322 mm	+/- 30°	✓

MULTITOOL - HANDLER FOR MULTIPLE ATTACHMENTS

ATT-08-004

Support for the following attachments:

- ATT-06-010
- ATT-08-002
- ATT-08-003

MTM

CONVEYOR BELT MAINTENANCE UNIT, UP TO 25 T

ATT-08-008

Attachment for changing conveyor belts. The attachment has two stabiliser feet for use when removing/installing the belts, and a hydraulic extension for gripping/releasing the drive wheel drum. It can handle up to 4 m diameter and 2.25 m long drums with the belt wound onto them, with a load capacity of up to 25 t.

CBR

25,000 kg	1,192.5 - 2,842.5 mm	4,449 - 6,914 mm	360°	✓

SNOW PLOUGH BLADE

ATT-08-009

Snow plough blade with a steel frame and quick-coupling counterplate (DIN 76060/A compliant), or alternatively a three-point bracket for three-point front hitches as typically found on agricultural machinery. The front edge of the blade is constructed in two all-steel sections. The scraper blade is made of six independent wear-resistant steel sectors. The unit features an impact mitigation system with adjustable steel springs on each individual sector of the scraper blade. These flex backwards (against the direction of travel) in the event of a collision. It also has an overpressure valve to dampen side impacts, with R2 hydraulic pipe and unified quick fittings and couplings. The LTL blade can be configured as a wedge, as a single tilted blade facing left or right, or as an inverse wedge (spoon).

-

ATTACHMENT WEIGHT	TIP HEIGHT	BLADE END HEIGHT	WORKING WIDTH	MAX. WIDTH FOR TRANSPORT ON THE ROAD	RFID
900 kg	980 mm	1,150 mm	3.47 m	4.00 m	✓

COILS HANDLER 30T (SPUR) WITH SIDE SHIFT

ATT-08-012

Attachment for handling large steel coils in heavy industry applications, up to 30 t.
Equipped with a levelling indicator and +/- 300 mm extra sideshift to facilitate handling.

SCT 30T			
			RFID
30,000 kg	2,015 mm	+/- 300 mm	✓

STEEL COIL HANDLER 22 T (CLAMP)

ATT-08-013

Attachment for handling large steel coils in heavy industry applications, for coils from 1200 mm to 1600 mm diameter. Pivot tilt +/- 90° and sideshift +/- 300 mm

CH 22T					
	MAX	MIN			RFID
22,000 kg	1,600 mm	1,200 mm	+/- 90°	+/- 300 mm	✓

HANDLING AND DEMOLITION CLAMP

ATT-08-011

Loader bucket with reinforced construction for safe, stable loading. 360° rotation and 1685 mm opening. OPT-02-022 required.

CHECK FOR ANY PREARRANGEMENT REQUIREMENTS

BM 120			
2,000 kg	1,685 mm	360°	✓

COMPATIBILITY

	ATT-**08-001**	ATT-**08-002**	ATT-**08-003**	ATT-**08-004**	ATT-**08-005**	ATT-**08-007**	ATT-**08-008**	ATT-**08-009**
RTH 5.18	✓	✗	✗	✗	✓	✓	✗	✗
RTH 5.21	✓	✗	✗	✗	✓	✓	✗	✗
RTH 5.23	✓	✗	✗	✗	✓	✓	✗	✗
RTH 5.25	✓	✗	✗	✗	✓	✓	✗	✗
RTH 6.22 EC/TC	✓	✗	✗	✗	✓	✓	✗	✗
RTH 6.26 EC/TC	✓	✗	✗	✗	✓	✓	✗	✗
RTH 6.31 EC/TC	✓	✗	✗	✗	✓	✓	✗	✗
RTH 8.27/TC	✓	✗	✗	✗	✓	✓	✗	✗
RTH 8.35/TC	✓	✗	✗	✗	✓	✓	✗	✗
RTH 8.39/TC	✓	✗	✗	✗	✓	✓	✗	✗
RTH 8.46/TC	✓	✗	✗	✗	✓	✓	✗	✗
RTH 8.51	✓	✗	✗	✗	✓	✓	✗	✗
RTH 10.37	✓	✗	✗	✗	✓	✓	✗	✗
RTH 13.26	✓	✗	✗	✗	✓	✓	✗	✗
TH 3.6	✗	✗	✗	✗	✗	✗	✗	✗
TH 3,5.7	✗	✗	✗	✗	✗	✗	✗	✗
TH 3,5.9	✗	✗	✗	✗	✗	✗	✗	✗
TH 4.15 S/SP	✗	✗	✗	✗	✗	✗	✗	✗
TH 4.19 S/SP	✗	✗	✗	✗	✗	✗	✗	✗
TH 4,5.19 P	✗	✗	✗	✗	✗	✓	✗	✗
TH 5.8 P	✗	✗	✗	✗	✗	✓	✗	✗
TH 5,5.15/P	✗	✗	✗	✗	✗	✓	✗	✗
TH 5,5.19 P	✗	✗	✗	✗	✗	✓	✗	✗
TH 5,5.24 P	✗	✗	✗	✗	✗	✓	✗	✗
TH 6.20 P	✗	✗	✗	✗	✗	✓	✗	✗
TH 7.10 P	✗	✗	✗	✗	✗	✓	✗	✗
HTH 10.10	✗	✗	✗	✗	✗	✓	✗	✗
HTH 12.10	✗	✗	✗	✗	✗	✓	✗	✗
HTH 16.10	✗	✓	✓	✓	✗	✗	✓	✓
HTH 20.10	✗	✓	✓	✓	✗	✗	✓	✓
HTH 25.11	✗	✓	✓	✓	✗	✗	✓	✓
HTH 27.11	✗	✓	✓	✓	✗	✗	✓	✓
HTH 35.12	✗	✓	✓	✓	✗	✗	✓	✓

	ATT-**08-010**	ATT-**08-011**	ATT-**08-012**	ATT-**08-013**	ATT-**08-014**	ATT-**08-018**	ATT-**08-021**
RTH 5.18	✓	✓	✗	✗	✓	✗	✓
RTH 5.21	✓	✓	✗	✗	✓	✗	✓
RTH 5.23	✓	✓	✗	✗	✓	✗	✓
RTH 5.25	✓	✓	✗	✗	✓	✗	✓
RTH 6.22 EC/TC	✓	✓	✗	✗	✓	✗	✓
RTH 6.26 EC/TC	✓	✓	✗	✗	✓	✗	✓
RTH 6.31 EC/TC	✓	✓	✗	✗	✓	✗	✓
RTH 8.27/TC	✓	✓	✗	✗	✓	✗	✓
RTH 8.35/TC	✓	✓	✗	✗	✓	✗	✓
RTH 8.39/TC	✓	✓	✗	✗	✓	✗	✓
RTH 8.46/TC	✓	✓	✗	✗	✓	✗	✓
RTH 8.51	✓	✓	✗	✗	✓	✗	✓
RTH 10.37	✓	✓	✗	✗	✓	✗	✓
RTH 13.26	✓	✓	✗	✗	✓	✗	✓
TH 3.6	✗	✗	✗	✗	✗	✗	✗
TH 3,5.7	✗	✗	✗	✗	✗	✗	✗
TH 3,5.9	✗	✗	✗	✗	✗	✗	✗
TH 4.15 S/SP	✗	✗	✗	✗	✗	✗	✗
TH 4.19 S/SP	✗	✗	✗	✗	✗	✗	✗
TH 4,5.19 P	✓	✗	✗	✗	✓	✓	✓
TH 5.8 P	✓	✗	✗	✗	✓	✓	✓
TH 5,5.15/P	✓	✗	✗	✗	✓	✓	✓
TH 5,5.19 P	✓	✗	✗	✗	✓	✓	✓
TH 5,5.24 P	✓	✗	✗	✗	✓	✓	✓
TH 6.20 P	✓	✗	✗	✗	✓	✓	✓
TH 7.10 P	✓	✗	✗	✗	✓	✓	✓
HTH 10.10	✓	✓	✗	✗	✓	✓	✗
HTH 12.10	✓	✓	✗	✗	✓	✓	✗
HTH 16.10	✗	✗	✓	✓	✗	✗	✗
HTH 20.10	✗	✗	✓	✓	✗	✗	✗
HTH 25.11	✗	✗	✓	✓	✗	✗	✗
HTH 27.11	✗	✗	✓	✓	✗	✗	✗
HTH 35.12	✗	✗	✓	✓	✗	✗	✗

✓: yes ✗: no

SECTION
LIST OF ATTACHMENTS

DESCRIPTION	CODE	PRODUCT	SECTION
PLATFORMS			
Extendable rotating platform 1,000 kg	**ATT-01-016**	REP 10.2-4,7	1-4
Extendable rotating platform, 500 kg - 4.5 m	**ATT-01-007**	REP 2-4,5	1-4
Extendable rotating platform, 500 kg - 5.5 m	**ATT-01-009**	REP 2-5.5	1-4
Extendable rotating platform, 500 kg - 6.5 m	**ATT-01-011**	REP 2-6.5	1-5
Extendable rotating platform + winch 600 kg	**ATT-01-026**	REP 5.2-4,5 WO,6	1-8
Extendable rotating platform, 500 kg, with 600 kg capacity winch	**ATT-01-018**	RPRAB 10-3,5	1-9
Extendable rotating platform for roofs	**ATT-01-020**	RRP 10.2,5-3,5	1-9
Fixed telescopic platform, 200 kg	**ATT-01-022**	TP 2.10	1-6
Telescopic platform, 450kg	**ATT-01-004**	TP 4,5.10	1-7
Mining platform, 450 kg	**ATT-01-027**	CP 1.8	1-7
Platform, 250 kg	**ATT-01-001**	P 1,4	1-2
Platform, 250 kg	**ATT-01-002**	PS 1,4	1-2
Rotating platform, 250 kg	**ATT-01-003**	RP 1,4	1-2
Rotating platform, 250 kg	**ATT-01-005**	RP 2,2	1-3
Rotating platform for working in tunnels 500 kg	**ATT-01-013**	CRP 5	1-8
Telescopic platform, positive/negative, 250 kg	**ATT-01-024**	TP O-U-R	1-6

DESCRIPTION	CODE	PRODUCT	SECTION
WINCHES			
Double pull winch 13 t	**ATT-02-018**	W 13	2-7
Double pull winch 16 t	**ATT-02-008**	W 16	2-6
Double pull winch 2.7 t	**ATT-02-001**	W 2,7	2-2
Double pull winch 3.5 t	**ATT-02-002**	W 3,5	2-2
Double pull winch 5 t	**ATT-02-019**	W 5	2-3
Double pull winch 6 t	**ATT-02-004**	W 6	2-4
Double pull winch 8 t	**ATT-02-006**	W 8	2-5
Rear boom winch boom, single pull 3 t / double pull 6 t - for RTH 6.22, for road use	**ATT-02-022**	WB 6	2-7
Rear boom winch, single pull 3 t / double pull 6 t - for RTH 6.26, for road use	**ATT-02-012**	WB 6	2-8
Rear boom winch, single pull 3 t / double pull 6 t - for RTH 6.31, for road use	**ATT-02-013**	WB 6	2-8
Rear boom winch, single pull 4 t / double pull 8 t - for RTH 8.27, for road use	**ATT-02-005**	WB 8	2-9
Single pull winch 1.75 t / double pull winch 3.5 t	**ATT-02-009**	W 3,5 - 1,75	2-3
Single pull winch 3 t / double pull winch 6 t	**ATT-02-010**	W 3 – 6	2-4
Single pull winch 3 t / double pull winch 6 t / triple pull winch 8 t	**ATT-02-014**	W 3/6/8	2-9
Single pull winch 4 t / double pull winch 8 t	**ATT-02-023**	W 4 – 8	2-5
Single pull winch 5 t / double pull winch 10 t	**ATT-02-021**	W 5 – 10	2-6

SECTION
LIST OF ATTACHMENTS

DESCRIPTION	CODE	PRODUCT	SECTION
FORK CARRIAGES			
FEM fork carriage with positioner	**ATT-03-062**	FCPF 3,5 FIX	3-8
Floating fork carrier 10 t	**ATT-03-047**	FC 10T	3-18
Fork carriage 8 t with positioner	**ATT-03-035**	FCP 8T	3-17
Fork carriage with positioner	**ATT-03-045**	FCP FIX	3-10
FEM fork carriage - with sideshift	**ATT-03-044**	FCTF	3-10
FEM fork carriage 2.5 t, side tipping - for emptying bins	**ATT-03-054**	RFCFS 2,5 FIX	3-4
FEM fork carriage 3 t	**ATT-03-034**	FCFS 3T FIX	3-2
FEM fork carriage 3 t - with sideshift	**ATT-03-066**	FCTF 3T FIX	3-3
FEM fork carriage 3 t - with positioner	**ATT-03-067**	FCPS 3T FIX	3-4
FEM fork carriage 3 t - with sideshift and positioner	**ATT-03-068**	FCPT 3T FIX	3-3
FEM fork carriage 5 t	**ATT-03-060**	FCF 5T I FIX	3-7
FEM fork carriage 6 t	**ATT-03-010**	FCF 6T 1,3	3-14
FEM fork carriage 8 t	**ATT-03-037**	FCF 8T SH 1,3	3-18
FEM fork carriage for TH	**ATT-03-043**	FCF 1,3 FIX	3-9
FEM fork carriage with sideshift	**ATT-03-061**	FCTF 3,5T FIX	3-8
FEM fork carriage with sideshift and positioner	**ATT-03-063**	FCTF 3,5 FIX	3-9
FEM fork carriage with positioner and side shift	**ATT-03-046**	FCPT FIX R	3-11
FEM Rotating fork carriage	**ATT-03-041**	RFC 5	3-20
FEM rotating fork carriage with tilt	**ATT-03-002**	RFCT 5	3-19
FEM standard fork carriage, 5 t	**ATT-03-003**	FCF 5T 1,3	3-13
Floating fork carriage 10 t	**ATT-03-018**	F 10T	3-21
Floating fork carriage 10 t - wide version - with 2,500 mm long forks and positioner	**ATT-03-020**	FCP 10T 2,5 C	3-22
Floating fork carriage 10 t - with positioner	**ATT-03-019**	FCP 10T	3-22

DESCRIPTION	CODE	PRODUCT	SECTION
Floating fork carriage 12,2 t	**ATT-03-013**	FC 12,2T	3-23
Floating fork carriage 12.2 t with 2,500 mm long forks and positioner	**ATT-03-052**	FCP 12,2T 2,5	3-25
Floating fork carriage 12.2 t with 2,500 mm long forks	**ATT-03-050**	FC 12,2T 2,5	3-24
Floating fork carriage 12.2 t with forks for containers and positioner	**ATT-03-053**	FCP 12,2T 2,5 C	3-25
Floating fork carriage 12.2 t - with positioner	**ATT-03-051**	FCP 12,2T	3-24
Fork carriage 25 t - wide version - with 2,400 mm long forks and positioner	**ATT-03-055**	FCP 25T 2,4	3-29
Floating fork carriage 16 t	**ATT-03-022**	F 16T	3-26
Floating fork carriage 16 t - wide - with 2,400 mm long forks and positioner - version	**ATT-03-025**	FCPT 16T C	3-27
Floating fork carriage 16 t with 2,400 mm long forks, with positioner and sideshift	**ATT-03-024**	FCPT 16 2,4	3-27
Floating fork carriage 16 t with positioner	**ATT-03-023**	FCP 16T	3-26
Floating fork carriage 20 t with positioner	**ATT-03-026**	FCP 20T	3-28
Floating fork carriage 27 t with positioner	**ATT-03-029**	FCP 27T	3-30
Floating fork carriage 30 t with positioner	**ATT-03-030**	FCP 30T	3-30
Floating fork carriage 30 t - wide version - with positioner and sideshift	**ATT-03-031**	FCPT 30T 2,4 R	3-31
Floating fork carriage 30 t, adjustable width, with positioner	**ATT-03-032**	FCEP 30T 2,4 R	3-31
Floating fork carriage 35 t with positioner	**ATT-03-033**	FCP 35T	3-32
Floating fork carriage 3 t	**ATT-03-016**	FCS 3T FIX	3-2
Floating fork carriage 4.5 t	**ATT-03-042**	FC 4,5T FIX	3-5
Floating fork carriage 5 t	**ATT-03-001**	FC 5T	3-12
Floating fork carriage 5 t	**ATT-03-039**	FC 5T FIX	3-5
Floating fork carriage 5.5 t	**ATT-03-040**	FC 5,5T FIX	3-6
Floating fork carriage 6 t	**ATT-03-006**	FC 6T	3-13
Floating fork carriage 6 t	**ATT-03-004**	FC 6T	3-6
Floating fork carriage 6 t - wide version - with 1,500 mm long forks	**ATT-03-009**	FC 6T 6x5 FT	3-14

SECTION
LIST OF ATTACHMENTS

DESCRIPTION	CODE	PRODUCT	SECTION
Floating fork carriage 6 t - wide version - with 1,800 mm long forks	**ATT-03-014**	FC 6T 72x72 FIX	3-15
Floating fork carriage 7 t	**ATT-03-011**	FC 7T FIX S	3-7
Floating fork carriage 8 t	**ATT-03-015**	FC 8T L	3-15
Floating fork carriage 8 t	**ATT-03-007**	FC 8T 46 L	3-16
Floating fork carriage 8 t - wide version - with 1,800 mm long forks	**ATT-03-017**	FC 8T 72x72	3-16
Fork carriage 10 t - wide version - with positioner and sideshift	**ATT-03-036**	FCPT 10T 1,5	3-23
Fork carriage 25 t - wide version - with 2,400 mm long forks, positioner and sideshift	**ATT-03-056**	FCPT 25T	3-29
Fork carriage 25 t - with 2,400 mm long forks	**ATT-03-057**	F 25T	3-28
Fork carriage 8 t - wide version - with 1,800 mm long forks and positioner	**ATT-03-058**	FCP 8T 72x72	3-17
Load protection grille for FEM fork carriages	**ATT-03-005**	PCF	3-21
Load protection grille for floating fork carriages	**ATT-03-038**	PC	3-20
Wide fork carriage with long forks (72x60")	**ATT-03-049**	FC 6x5 FIX	3-12
Wide fork carriage with long forks (72x72")	**ATT-03-048**	FC 72x72 FIX	3-11

BRACCIO TRALICCIATO CON E SENZA ARGANO			
Boom with 3 hooks, 20 t - 15 t - 10 t	**ATT-04-008**	J 20 S-3	4-10
Box-shaped boom with hook 2 t	**ATT-04-013**	J 2000	4-6
Box-shaped boom with hook 4 t	**ATT-04-024**	J 4000	4-6
Box-shaped boom with hook 8 t	**ATT-04-026**	J 8000	4-9
Box shaped boom with two hooks 2 t- 7 t	**ATT-04-027**	J 2000 / 7000	4-7
Hydraulic telescopic boom with hook 1,5 / 2,5 t	**ATT-04-021**	JT 2500	4-8
Jib with 2t [1.2 m] hook	**ATT-04-002**	JW 2000	4-5
Lattice boom with double pull winch 2 t	**ATT-04-015**	JW 2000	4-3
Lattice boom with hook 600 kg	**ATT-04-001**	J 600	4-5
Lattice boom with single pull winch 1.5 t	**ATT-04-011**	JW 1500	4-3
Lattice boom with single pull winch 2.7 t	**ATT-04-017**	JW 2700	4-4
Lattice boom with single pull winch 3 t	**ATT-04-019**	JW 3000	4-4
Lattice boom with single pull winch 800 kg	**ATT-04-005**	JW 800	4-2
Lattice boom with single pull winch 900 kg	**ATT-04-028**	JW 900	4-2
Lattice boom with winch, single pull 1.2 t / double pull 3 t	**ATT-04-009**	JW 1200/3000	4-8
Lattice boom with winch, single pull 800 kg / double pull 1.5 t	**ATT-04-007**	JW 800/1500	4-7
Swan-neck boom with hook 3 t	**ATT-04-023**	JCC 3000	4-9

SECTION

LIST OF ATTACHMENTS

DESCRIPTION	CODE	PRODUCT	SECTION
HOOKS			
Hook 10 t	**ATT-05-005**	H 10	5-4
Hook 13 t	**ATT-05-013**	H 13	5-5
Hook 16 t	**ATT-05-007**	H 16S	5-5
Hook 20 t	**ATT-05-008**	H 20S	5-6
hook 3 t	**ATT-05-004**	HS 3	5-2
Hook 30 t	**ATT-05-009**	H 30S	5-6
Hook 5 t	**ATT-05-014**	H 5	5-2
Hook 50 t	**ATT-05-012**	H 50	5-7
Hook 6 t	**ATT-05-001**	H 6	5-3
Hook 7 t	**ATT-05-002**	H 7	5-3
Hook 8 t	**ATT-05-003**	H 8	5-4
Hook 40 t (narrow)	**ATT-05-011**	H 40S	5-7

DESCRIPTION	CODE	PRODUCT	SECTION
HANDLERS			
3D-Film handler 2.5 t	**ATT-06-002**	3DF 2,5	6-2
4D-Film handler, 900 kg	**ATT-06-008**	4DFH 0,9	6-7
Cylinder handler 11 t	**ATT-06-010**	CC	6-7
Cylinder handler 4.5 t	**ATT-06-011**	CC 4.5	6-5
Cylinder handler 4.5 t	**ATT-06-012**	CC 4.5	6-8
Pipes handler 1,000 kg	**ATT-06-009**	PC 1000	6-4
Pipes handler 4,5 t	**ATT-06-013**	FC 4,5 T PIPES	6-4
Pipes handler 16,6 t	**ATT-06-014**	FCG 16,6 T 2,4	6-5
Ribs clamp 4 t	**ATT-06-001**	RC 4T	6-2
Tyre handler 16 t - 63"	**ATT-06-007**	TC 16.63 CP	6-6
Tyre handler 2.5 t - 25"	**ATT-06-003**	TC 2,5.25	6-3
Tyre handler 3.5 t - 55"	**ATT-06-004**	TC 3,5	6-8
Tyre handler 3.8 t - 49"	**ATT-06-005**	TC 3,8.49	6-3
Tyre handler 8 t - 63"	**ATT-06-006**	TC 08.63	6-6

SECTION
LIST OF ATTACHMENTS

DESCRIPTION	CODE	PRODUCT	SECTION
BUCKETS			
bucket with retainer 1,000 l	**ATT-07-008**	CB 1000 TR	7-10
Bucket 850 l (4x1)	**ATT-07-009**	4X1 850L	7-10
Bucket 5.900 l (4x1)	**ATT-07-006**	4X1 5900	7-11
Bucket with bolt-on cutting edge 1,000 l	**ATT-07-015**	CB 1000 DL	7-2
Bucket with bolt-on cutting edge 1,500 l	**ATT-07-016**	CB 1500 DL	7-3
Bucket with bolt-on cutting edge 2,000 l	**ATT-07-018**	CB 2000 DL	7-3
Bucket with welded cutting edge 1,000 l	**ATT-07-013**	CB 1000 SL	7-7
Bucket with welded cutting edge 1,000 l [width 2,100 mm]	**ATT-07-021**	CB 1000 2,1 SL	7-6
Bucket with welded cutting edge 1,500 l	**ATT-07-014**	CB 1500 SL	7-7
Bucket with welded cutting edge 2,000 l	**ATT-07-017**	CB 2000 SL	7-8
Bucket with welded cutting edge 800 l	**ATT-07-005**	CB 1500	7-5
Bucket with welded cutting edge 800 l [width 2,100 mm]	**ATT-07-002**	CB 800 SL	7-6
Grapple Bucket (with welded tines) – Struck capacity 900 l	**ATT-07-001**	AB 900 2,03 G	7-2
Reinforced bucket with bolt-on cutting edge 1,500 l	**ATT-07-010**	CB 1500	7-4
Reinforced bucket with bolt-on cutting edge, 2,000 l	**ATT-07-011**	CB 2000	7-4
Reinforced bucket with bolt-on cutting edge, 2,500 l	**ATT-07-012**	CB 2500	7-5
Reinforced bucket with welded cutting edge 1,000 l	**ATT-07-019**	CB 1000	7-8
Reinforced bucket with welded cutting edge 1,500 l	**ATT-07-020**	CB 1500	7-9
Aggregate container 2,000 l	**ATT-07-007**	BIM 2000	7-9

DESCRIPTION	CODE	PRODUCT	SECTION
SPECIAL EQUIPMENT			
Concrete bucket 600 l	**ATT-08-010**	BB 600	8-3
Conveyor belt maintenance unit, up to 25 t	**ATT-08-008**	CBR	8-7
Et-hover-univac vacuum lifting attachment	**ATT-08-007**	ET-HOOVER -UNIVAC	8-4
ET-Litocran700 vacuum telescopic handler	**ATT-08-021**	ET-LITOCRAN700	8-5
Handling and demolition grapple	**ATT-08-011**	BM 120	8-9
Mixer bucket 700 l	**ATT-08-014**	MB 700 SL	8-3
Multitool - handler for multiple attachments	**ATT-08-004**	MTM	8-6
Paper clamp 3.2 t	**ATT-08-018**	-	8-4
Snow plough blade	**ATT-08-009**	-	8-7
Steel coil handler 22 t (clamp)	**ATT-08-013**	CH 22T	8-8
Steel coil handler 30 t (strut) - with positioner	**ATT-08-012**	SCT 30T	8-8
Suspension cylinders tool	**ATT-08-002**	SCT	8-5
Tree cutter	**ATT-08-001**	-	8-2
Tree cutter boom with clamp 1,5 t	**ATT-08-005**	JGS-GMT050 TTC	8-2
Wheel hub tool	**ATT-08-003**	RWTH	8-6

MAGNI

MAGNI
MAGNI
MAGNI
A

The data in this brochure is purely informational, and is subject to change without notice.

magnith.com

#LIFT**DIFFERENT**